NOTICE OF MEETING OF THE WOODBURY COUNTY BOARD OF SUPERVISORS
(MAY 5, 2015) (WEEK 19 OF 2015)

Agenda and Minutes also available at
www.woodburyiowa.com

Larry D. Clausen	Mark A. Monson	Jaclyn D. Smith	Jeremy J. Taylor	Matthew A. Ung
389-5329	204-1015	898-0477	259-7910	490-7852
lclausen@sioux-city.org	mark@mudflap.com	jasmith@sioux-city.org	jeremytaylor@cableone.net	matthewung@sioux-city.org

You are hereby notified a meeting of the Woodbury County Board of Supervisors will be held May 5, 2015 at **4:30 p.m.** in the Basement of the Courthouse, 620 Douglas Street, Sioux City, Iowa for the purpose of taking official action on the agenda items shown hereinafter and for such other business that may properly come before the Board.

This is a formal meeting during which the Board may take official action on various items of business. If you wish to speak on an item, please follow the seven participation guidelines adopted by the Board for speakers.

1. Anyone may address the Board on any agenda item after initial discussion by the Board.
2. Speakers will approach the microphone one at a time and be recognized by the Chair.
3. Speakers will give their name, spell their name, and give their address and then their statement.
4. Everyone will have an opportunity to speak. Therefore, please limit your remarks to **three minutes on any one item**.
5. At the beginning of the discussion on any item, the Chair may request statements in favor of an action be heard first followed by statements in opposition to the action.
6. Any concerns or questions you may have which do not relate directly to a scheduled item on the agenda will also be heard under the final agenda item "Citizen Concerns."
7. For the benefit of all in attendance, please turn off all cell phones and other devices while in the Board Chambers.

AGENDA

4:30 p.m.	1. Call Meeting to Order – Pledge of Allegiance to the Flag – Moment of Silence	
	2. Citizen Concerns	Information
	3. Approval of the agenda (May 5, 2015)	Action
	4. Approval of the minutes of April 28, 2015 meeting	Action
	5. Discussion and approval of claims	Action
	6. Human Resource – Ed Gilliland	
	a. Approval of Memorandum of Personnel Transactions	Action
	b. Authorize Chairman to Sign Authorization to Initiate Hiring Process and including a revised job description of the Building Superintendent	Action
	c. Discussion and action on Snow Cap Agreement	Action
	d. Presentation of resolution thanking and commending Harlan Salvatori	Information
4:40 p.m. (Set time)	7. Not to Exceed $900,000 General Obligation Capital Loan Notes	
	a. Public hearing on the authorization of a Loan Agreement and the issuance of Notes to evidence the obligation of the County thereunder	Action
	b. Approval of resolution instituting proceedings to take additional action for the issuance of not to exceed $900,000 General Obligation Capital Loan Notes	Action

8. Board Administration – Karen James
   Approval of resolution for a tax suspension for P. H. — Action

9. Juvenile Detention – Mark Olsen
   Discussion and approval for Chairman's signature to enter into a contract to Authorize web based staff training. — Action

10. Auditor's Office – Steve Hofmeyer
    Asking for the Board of Supervisors to approve lease for copier from Office Elements — Action

11. County Sheriff – Dave Drew
    Woodbury County, Iowa proclamation recognizing National Law Enforcement Memorial Week — Information

12. Board of Supervisors – Jeremy Taylor
    Information on County Commission of Veterans Affairs — Information

13. Board of Supervisors – Mark Monson
    Discussion and action on purchase of monitors for Board of Supervisors meeting room — Action

14. Secondary Roads – Mark Nahra
    a. Consideration of the revised paving policy — Action
    b. Consideration of certificate of completion for bridge replacement project L-B(K199)—73-97 — Action
    c. Consideration of award of quotations for repair to bridge C-160, the Haskell Avenue bridge over McElhaney Creek north of Moville — Action
    d. Initial review of County Secondary Road Department policies for signs and driveways. — Information
    e. Consideration of permit for installation of underground electric lines within the Highway Right of Way for Woodbury County REC to provide service to a new home site on Lee Avenue — Action
    f. Consideration of permit for installation of underground electric lines within the Highway Right of Way for Woodbury County REC to provide service to run new line south of Anthon — Action
    g. Consideration of permit for installation of underground electric lines within the Highway Right of Way for Woodbury County REC to provide service to run new line in Grant Township — Action

15. **Recess Board of Supervisors Meeting**
    Convene Orton Slough Drainage District Trustee's Meeting
    a. Consideration of plans and approval to go out for a quote for maintenance Work on the Orton Slough Drainage District — Action

    Adjourn Orton Slough Drainage District Trustee's Meeting
    Continue Board of Supervisors Meeting

16. Reports on committee meetings — Information

17. Citizen's Concerns — Information

18. Board Concerns and Comments — Information

ADJOURNMENT

Subject to Additions/Deletions

CALENDAR OF EVENTS

MONDAY, MAY 4	**6:00 p.m.**	Board of Adjustment meeting, Board of Supervisors' Chambers
TUESDAY, MAY 5	**4:00 p.m.**	Veteran Affairs Meeting, Veteran Affairs Office, 1211 Tri-View Ave.
WEDNESDAY, MAY 6	**4:15 p.m.**	Conservation Board Meeting, Dorothy Pecaut Nature Center, Stone Park
TUESDAY, MAY 12	**10:00 a.m.**	Senior Center Board of Directors Meeting, 313 Cook Street
WEDNESDAY, MAY 13	**8:05 a.m.**	Woodbury County Information Communication Commission, Board of Supervisors Chambers
	12:00 noon	District Board of Health Meeting, 1014 Nebraska St.
	6:30 p.m.	911 Service Board Meeting, Public Safety Center, Climbing Hill
	8:00 p.m.	County's Mayor Association Meeting, Public Safety Center, Climbing Hill
THURSDAY, MAY 14	**7:00 p.m.**	Siouxland Mental Health Center, Board Meeting, 625 Court Street
	12:00 p.m.	SIMPCO Board of Directors, 1122 Pierce St, Sioux City, Iowa
TUESDAY, MAY 19	**4:30 p.m.**	Community Action Agency of Siouxland Board Meeting, 2700 Leech Avenue
WEDNESDAY, MAY 20	**12:00 noon**	Siouxland Economic Development Corporation Meeting, 617 Pierce St., Ste. 202, Sioux City, Iowa
THURSDAY, MAY 21	**11:00 a.m.**	Siouxland Regional Transit Systems (SRTS) Board Meeting, SIMPCO Office, 1122 Pierce St., Sioux City, Iowa
TUESDAY, MAY 26	**2:00 p.m.**	Decat Board Meeting, Western Hills AEA, Room F
	2:00 p.m.	Sioux Rivers Regional Governance Board Meeting, Plymouth County Courthouse Annex Building, 215 4th Ave. S.E., Le Mars, Iowa
	6:00 p.m.	Zoning Commission Meeting, Board of Supervisors' Chambers
	7:30 p.m.	Fair Board Meeting, Woodbury County Fair Office, Fairgrounds, Moville, IA

Woodbury County is an Equal Opportunity Employer. In compliance with the Americans with Disabilities Act, the County will consider reasonable accommodations for qualified individuals with disabilities and encourages prospective employees and incumbents to discuss potential accommodations with the Employer.

Federal and state laws prohibit employment and/or public accommodation discrimination on the basis of age, color, creed, disability, gender identity, national origin, pregnancy, race, religion, sex, sexual orientation or veteran's status. If you believe you have been discriminated against, please contact the Iowa Civil Rights Commission at 800-457-4416 or Iowa Department of Transportation's civil rights coordinator. If you need accommodations because of a disability to access the Iowa Department of Transportation's services, contact the agency's affirmative action officer at 800-262-0003.

APRIL 28, 2015 — EIGHTEENTH MEETING OF THE WOODBURY COUNTY BOARD OF SUPERVISORS

The Board of Supervisors met on Tuesday, April 28, 2015 at 4:30 p.m. Board members present were Clausen, Monson, Taylor, Smith, and Ung. Staff members present were Karen James, Board Administrator, Dennis Butler, Finance/Operations Controller, Joshua Widman, Assistant County Attorney, Ed Gilliland, Human Resources Director, Gloria Mollet, Assistant Human Resources Director, Jean Jessen, Deputy County auditor, and Patrick Gill, Auditor/Clerk to the Board.

1. The meeting was called to order – Pledge of Allegiance to the Flag – Moment of Silence.

2. Citizen concerns.

3. Motion by Ung second by Taylor to approve the Agenda for April 28, 2015. Carried 5-0. Copy filed.

4. Motion by Taylor second by Smith to approve the minutes of the April 21, 2015 Board meeting. Carried 5-0. Copy filed.

5. Motion by Clausen second by Ung to approve the county's claims totaling $750,540.24. Carried 5-0. Copy filed.

6a. Motion by Taylor second by Ung to approve the separation of Jason Byers, Temporary Equipment Operator, Secondary Roads Dept., effective 4-22-15. End of Temporary Work.; the reclassification of Forrest Johnston, Foreman, Secondary Roads Dept., effective 04-27-15, $61,180/year, 2%=$1,288/year. Per Wage Matrix, from Step 3 to Step 4.; the separation of Martin Pottebaum, Supervisor, Courthouse Safety & Security, effective 05-01-15. Position Eliminated.; and the appointment of Michelle Skaff, Emergency Management Coordinator, Emergency Management Dept., effective 5-01-15, $45,395/year. Job Vacancy Posted 2-11-15. Entry Level Salary: $43,000-$45,000/year. Carried 5-0. Copy filed.

6b. Motion by Clausen second by Taylor to approve and authorize the Chairperson to sign and "Authorization to Initiate Hiring Process" for P/T Courthouse Safety & Security Officer, County Sheriff Dept., AFSCME Grade 3: $14.96-$16.43/hour. Carried 5-0. Copy filed.

6c. Motion by Monson second by Taylor to approve and receive for signatures a Resolution Thanking and Commending Harlan Salvatori for his service to Woodbury County. Carried 5-0.

RESOLUTION #12,168
A RESOLUTION THANKING AND COMMENDING
HARLAN SALVATORI
FOR YOUR SERVICE TO WOODBURY COUNTY

WHEREAS, Harlan Salvatori has demonstrated himself to be as an outstanding citizen of Woodbury County by volunteering many hours unselfishly for years; and
WHEREAS, the service given by Harlan Salvatori as a Woodbury County citizen, has been characterized by his dedication to the best interests of the citizens of Woodbury County; and

NOW THEREFORE, BE IT RESOLVED BY THE BOARD OF SUPERVISORS OF WOODBURY COUNTY, IOWA that the undersigned members of this Board thank and commend Harlan Salvatori for his years of service to Woodbury County; and

BE IT FURTHER RESOLVED that it is the wish of all those signing below that the future hold only the best for this very deserving person, Harlan Salvatori.

BE IT SO RESOLVED this 5 day of May.
WOODBURY COUNTY BOARD OF SUPERVISORS
Copy filed.

7a. Motion by Clausen second by Ung to approve and authorize the Chairperson to sign a Resolution for suspension of taxes through redemption process for Jason Kishiku, 2941 Sunset Circle, parcel #894717478040. Carried 5-0.

WOODBURY COUNTY, IOWA
RESOLUTION #12,169
RESOLUTION APPROVING PETITION FOR SUSPENSION
OF TAXES THROUGH THE REDEMPTION PROCESS

WHEREAS, Jason Kishiku as joint titleholders of a property located at 2941 Sunset Circle, Woodbury County, Iowa, and legally described as follows:

Parcel # 8947 17 478 040

SUNSET VIEW LOT 44 BLK 4

WHEREAS, Jason Kishiku, as joint titleholders of the aforementioned property has petitioned the Board of Supervisors for a suspension of taxes pursuant to the 1999 Iowa Code Section 447.9(3) and,

WHEREAS, the Board of Supervisors recognizes from documents provided that the petitioner is unable to provide to the public revenue; and

NOW, THEREFORE, BE IT RESOLVED, that the Woodbury County Board of Supervisors hereby directs the County Auditor to redeem this property Parcel #894717478040 owned by the petitioner from the holder of a certificate of purchase of the amount necessary to redeem under section 447.9, and hereby directs the Woodbury County Treasurer to so record the approval of this tax suspension for this parcel.

SO RESOLVED this 28th day of April, 2015.
WOODBURY COUNTY BOARD OF SUPERVISORS
Copy filed.

7b. Motion by Smith second by Taylor setting the hearing date for FY2015 Budget Amendment #2 for at. Carried 5-0. Copy filed.

8a. Motion by Smith second by Clausen to receive County Recorders for Fees Collected for the period 01/01/2015 through 03/31/2015. Carried 5-0. Copy filed.

7c. A public hearing was held at 4:40 p.m. for the sale of property parcel #260761 (1814 W. 3rd St., Sioux City). The Chairperson called on anyone wishing to be heard.

Motion by Clausen second by Taylor to close the public hearing. Carried 5-0.

Motion by Clausen second by Taylor to approve and authorize the Chairperson to sign a Resolution for the sale of this parcel to Robert Kelsheimer, 10886 Kentucky Road, Neosho, MO, for real estate parcel #260761 (1814 W. 3rd St., Sioux City) for $357.00 plus recording fees. Carried 5-0.

RESOLUTION OF THE BOARD OF SUPERVISORS
OF WOODBURY COUNTY, IOWA
RESOLUTION #12,170

BE IT RESOLVED by the Board of Supervisors of Woodbury County, Iowa, that the offer at public auction of:

By Robert Kelsheimer in the sum of **Three Hundred Fifty-Seven Dollars & 00/100 ($357.00)**----------dollars.

For the following described real estate, To Wit:

Parcel #260761

West 18 feet Lot 3 & Lots 4 & 5 Block 16, Hornick's Addition, City of Sioux City, Woodbury County, Iowa (1814 W. 3rd Street)

Now and included in and forming a part of the City of Sioux City, Iowa, the same is hereby accepted: said Amount being a sum LESS than the amount of the general taxes, interests, costs and penalties against the said Real Estate.

BE IT RESOLVED that payment is due by close of business on the day of passage of this resolution or this sale is null and void and this resolution shall be rescinded.

BE IT RESOLVED that per Code of Iowa Section 569.8(3 & 4), a parcel the County holds by tax deed shall not be assessed or taxed until transferred and upon transfer of a parcel so acquired gives the purchaser free title as to previously levied or set taxes. Therefore, the County Treasurer is requested to abate any taxes previously levied or set on this parcel(s).

BE IT FURTHER RESOLVED that the Chairman of this Board be and he is hereby authorized to execute a Quit Claim Deed for the said premises to the said purchaser.

SO DATED this 28th Day of April, 2015.
WOODBURY COUNTY BOARD OF SUPERVISORS
Copy filed.

8b. Motion by Taylor second by Ung to approve and authorize the Chairperson to sign proposed bylaws.

Motion by Smith second by Taylor to consider the bylaws by paragraph. Carried 5-0.

Motion by Clausen second by Smith to amend the proposed by laws by striking Sections 1 and 2 under Article IV and insert these amended Sections 1 and 2 under Article IV".

Section 1. Officers and Duties. The officers shall be a Chairperson, a Vice Chairperson, if nominated and elected by a majority of the Board, and a Clerk to the Board. These officers shall perform the duties as prescribed by Iowa Code, these bylaws and by the parliamentary authority adopted by the Board in descending order.

a. **Chairperson.** The Chairperson shall preside at all the meetings of the Board during the year. The Chairperson shall make all committee assignments to committees recognized in these bylaws. The Chairperson shall set the tentative agenda for all meetings of the Board. The Chairperson shall oversee the daily operations of county administration while acting within the policies established by the Board. The Chairperson shall be authorized to establish special purpose committees as needed subject to approval of the Board.
b. **Vice Chairperson.** If elected by a majority of the Board, the Vice Chairperson shall serve during the absence of the Chairperson.
c. **Clerk to the Board.** The Auditor and Recorder or the designee of the Auditor and Recorder shall serve as Clerk to the Board *ex officio*. The Clerk to the Board shall be recognized as the parliamentarian for all meetings of the Board.

Section 2. Time, Nomination Procedure, Method of Elections and Term of Office. The election of The Chairperson shall occur at the first meeting in each year. Nominations shall be made from the floor and the election shall be by roll call vote. A temporary chair shall be elected to preside over the election of the Chairperson. The Chairperson's term shall begin immediately. The Chairperson shall preside over the election of the Vice Chairperson if an election is held. Motion failed 2-3 on a roll call vote; Taylor, Ung and Monson opposed.

Motion by Clausen second by Taylor to strike the last sentence in Article VI, **Section 5. Agenda** and insert in its place: 'Any member of the Board may direct the Chairperson to place an information or discussion item on the agenda of a subsequent meeting. The Chairperson shall place an action item on the agenda of a subsequent meeting when directed by a majority of the Board. Carried 5-0.

Motion by Clausen second by Smith to strike the last sentence in **Section 8. Manner of Acting** under Article VI. Motion failed 2-3 on a roll call vote; Taylor, Ung and Monson opposed.

Motion by Clausen second by Taylor to strike the second sentence in **Section 9. Roll Call Votes** and insert in its place, In each meeting, the roll shall be called from the Chairperson's left on the first request and from the Chairperson's right on the second request and alternate as needed thereafter. Motion failed 2-3 on a roll call vote; Taylor, Ung and Monson opposed.

Motion by Smith second by Clausen to strike **Section 11. Electronic Participation** and insert in its place, **Section 11. Member Participation** A member must be physically present in the meeting room in order to participate in a meeting of the Board. Motion failed on 2-3 roll call vote; Taylor, Ung and Monson opposed.

Motion by Ung second by Taylor to insert after the word *year* in **Section 1. Adoption of Bylaws** under Article X, following a general election. Carried 5-0 on a roll call vote.

The main motion as amended carried 3-2on a roll call vote; Clausen and Smith opposed. Copy filed.

9a. Jon Buffington, Sioux City, asked the Board to approve the proposal presented by Turnkey Corrections Vending for the jail kiosk commissary contract.

Motion by Taylor second by Monson to approve the jail kiosk commissary contract with CBM as recommended by the staff of the Woodbury County Sheriff's Office. Carried 5-0 on a roll call vote. Copy filed.

9b. Nick DeRoos, C.F. Industries, Dale Patten, Sgt. Bluff, Roland Christensen, Sgt. Bluff and Gary Lester, Sgt. Bluff, discussed the traffic congestion at the C.F. Industries construction site.

Motion by Monson second by Clausen to approve the proposal for C.F. Industries traffic control at each of C.F. Industries shift changes and direct that the expenditures be funded up to $18,000.00 with gaming funds. Carried 5-0. Copy filed.

9c. There was a discussion about the purchase of speed data signs to be used in the C.F. Industries area to help with the control of traffic flow. The County Engineer will provide the funds to purchase the signs.

10. There was a discussion on safety and security policy.

11. Motion by Monson second by Taylor to approve the agreement between RML Architects L.L.C. and the County. Carried 5-0. Copy filed.

12a. Motion by Clausen second by Ung to approve and receive for signatures a Resolution supporting a RISE Grant application for improvements to Port Neal Circle to support the AGP, Inc. expansion project. Carried 5-0.

WOODBURY COUNTY, IOWA
RESOLTUION #12,171
A RESOLUTION IN SUPPORT OF AND AUTHORIZING THE FILING OF
AN APPLICATION FOR RISE PROJECT FUNDING
WITH THE IOWA DEPARTMENT OF TRANSPORTATION

WHEREAS, Ag Processing, Inc., desires to expand it existing operations in Woodbury County, State of Iowa, at 2753 Port Neal Circle, Sergeant Bluff, Iowa. Ag Processing, Inc. (also known as AGP, Inc.) will make a capital investment of $90 million for this expansion, and will directly hire 19 highly paid skilled employees to perform specialized work associated with its vegetable oil refinery;

WHEREAS, Woodbury County has determined it necessary to improve its current highway system serving the area to the property owned by AGP, Inc. at which the new refinery will be constructed; and

WHEREAS, the planned refinery and permanent job creation commitments are contingent upon transportation improvements being made to support the plant expansion and the new traffic generated by the business expansion; and

WHEREAS, the Iowa Department of Transportation administers the RISE program, which is designed to fund transportation improvements related to job creation; and

WHEREAS, RISE funding is essential in order for the county to make necessary transportation improvements in the area; and

WHEREAS, without an immediate commitment of RISE funds, these necessary transportation improvements cannot be completed in a timely manner, thus jeopardizing the AGP, Inc. commitment to creating jobs and opportunities for future industrial growth in Port Neal Area of Woodbury County; and

WHEREAS, Woodbury County is a duly recognized political subdivision of the State of Iowa acting under the laws of the State of Iowa; and

WHEREAS, the Board of Supervisors is the duly elected governing body of Woodbury County, Iowa; and

IT IS HEREBY RESOLVED by the Board of Supervisors of Woodbury County, Iowa as follows:

1. The Woodbury County Board of Supervisors is in full support of the opportunity to promote permanent job creation in Woodbury County and the related RISE program application.
2. The improved road serving the expanded plant site will continue to be dedicated to serve the public use.
3. Improvements to existing highways will serve not only the new plant, but assist in accommodating traffic to other area industries, present and future.
4. Woodbury County will assure that the RISE funded improvements will be adequately maintained according to the RISE program administrative rules.
5. Woodbury County will guarantee at least 20% of the funds for the Project from funds other than the RISE program.
6. County staff is authorized to prepare and file a RISE program application and any materials deemed necessary.

SO RESOLVED this 28th day of April 2015.
WOODBURY COUNTY BOARD OF SUPERVISORS
Copy filed.

12b. Motion by Monson second by Taylor to approve the final quantities as per IDOT audit for county highway bridge project #BROS-CO97(93)—8J-97 located on Glenn Ellen Road over Dead Man Creek section 21 Woodbury Township. Carried 5-0. Copy filed.

12c. Motion by Clausen second by Taylor to approve the final quantities as per IDOT audit for county highway bridge project #BROS-CO97(100)—8J-97 located on 290th Street over Wolf Creek section 02 of Willow Township. Carried 5-0. Copy filed.

12d. Motion by Smith second by Taylor to approve the permits for installation of an underground and overhead electric lines within the Highway Right of Way for MidAmerican Energy along and under Old Highway 141. Carried 5-0. Copy filed.

12e. Motion by Smith second by Taylor to approve the permits for work within the Highway Right of Way for Randy Hunt for replacement of culvert in an existing entrance on 260th Street. Carried 5-0. Copy filed.

13. Reports on committee meetings.

14. Citizen's concerns.

15. Board concerns and comments.

The Board adjourned the regular meeting until May 5, 2015.

Meeting sign in sheet. Copy filed.

#6a

WOODBURY COUNTY BOARD OF SUPERVISORS AGENDA ITEM(S) R

Date: 4-30-15

Weekly Agenda Date: 5-5-15

DEPARTMENT HEAD / CITIZEN: Ed Gilliland

SUBJECT: Memorandum of Personnel Transactions

ACTION REQUIRED:

Approve Ordinance ☐	Approve Resolution ☐	Approve Motion ☒
Give Direction ☐	Other: Informational ☐	Attachments ☒

WORDING FOR AGENDA ITEM: Approval of Memorandum of Personnel Transactions

EXECUTIVE SUMMARY:

BACKGROUND:

FINANCIAL IMPACT:

RECOMMENDATION:

ACTION REQUIRED:

Approved by Board of Supervisors March 3, 2015.

HUMAN RESOURCES DEPARTMENT

MEMORANDUM OF PERSONNEL TRANSACTIONS

DATE: May 5, 2015

*** PERSONNEL ACTION CODE:**

A- Appointment	R-Reclassification
T - Transfer	E- End of Probation
P - Promotion	S - Separation
D - Demotion	O - Other

TO: WOODBURY COUNTY BOARD OF SUPERVISORS

NAME	DEPARTMENT	EFFECTIVE DATE	JOB TITLE	SALARY REQUESTED	% INCREASE	*	REMARKS
McKenna, Shawn	County Sheriff	4-30-15	Civilian Jailer			S	Resignation.
Forch, John	Secondary Roads	5-06-15	District Foreman	$59,892/year		P	Job Vacancy Posted 2-11-15. Entry Level Salary: $57,711-$59,892/year.
Hardisty, Kyle	Secondary Roads	5-06-15	Temporary Summer Laborer	$9.50/hour		A	Not to exceed 120 days.
Ryan, Travis	County Sheriff	5-15-15	Civilian Jailer	$17.14/hour		A	Job Vacancy Posted 3-11-15. Entry Level Salary: $17.14/hour.
Fox, Jacklyn	County Attorney	5-23-15	Asst. County Attorney	$61,336/year	4.8%=$2,814/ year	R	Per AFSCME Asst. County Attorney Contract agreement, from Step 3 to Step 4.

APPROVED BY BOARD DATE: _____

ORIA MOLLET, ASST. HR DIRECTOR Gloria Mollet

WOODBURY COUNTY
HUMAN RESOURCES DEPARTMENT

MEMORANDUM

TO: **Board of Supervisors and the Taxpayers of Woodbury County**

FROM: **Ed Gilliland, Human Resources Director**
Gloria Mollet, Human Resources Assistant Director
gm

RE: **Memorandum of Personnel Transactions**

DATE: **May 5, 2015**

For the May 5, 2015 meeting of the Board of Supervisors and the Taxpayers of Woodbury County the Memorandum of Personnel Transactions will include:

1) Sheriff Department Civilian Jailer, Separation.
2) Secondary Roads Promotion from Equipment Operator to Foreman.
3) Secondary Roads Temporary Summer Laborer, Appointment.
4) Sheriff Department Civilian Jailer, Appointment.
5) Asst. County Attorney, from Step 3 to Step 4.

Thank you.

#66

WOODBURY COUNTY BOARD OF SUPERVISORS AGENDA ITEM(S) R

Date: 4-30-15

Weekly Agenda Date: 5-05-15

DEPARTMENT HEAD / CITIZEN: Ed Gilliland

SUBJECT: Authorization to Initiate Hiring Process

ACTION REQUIRED:

Approve Ordinance ☐	Approve Resolution ☐	Approve Motion ☒
Give Direction ☐	Other: Informational ☐	Attachments ☒

WORDING FOR AGENDA ITEM: Authorize Chairman to Sign Authorization to Initiate Hiring Process

EXECUTIVE SUMMARY:

BACKGROUND:

FINANCIAL IMPACT:

RECOMMENDATION:

ACTION REQUIRED:

Approved by Board of Supervisors March 3, 2015.

HUMAN RESOURCES DEPARTMENT

WOODBURY COUNTY, IOWA

DATE: May 5, 2015

AUTHORIZATION TO INITIATE HIRING PROCESS

DEPARTMENT	POSITION	ENTRY LEVEL	APPROVED	DISAPPROVED
Building Services	Building Superintendent	Wage Plan: $62,000- $83,000/year		
County Sheriff	P/T Courthouse Safety & Security Officer (Additional Position)	AFSCME Grade 3: $14.96- $16.43/hour		
County Sheriff	Civilian Jailer	CWA: $17.14/hour		
	*Please see attached memos.			

Chairman, Board of Supervisors

(AUTHFORM.doc/FORMS)

WOODBURY COUNTY

HUMAN RESOURCES DEPARTMENT

TO: Woodbury County Board of Supervisors

FROM: Ed Gilliland, Human Resources Director
Gloria Mollet, Human Resources Assistant Director
gmollet

SUBJECT: Authorization to Hire Building Superintendent

DATE: April 30, 2015

This memo to the Board of Supervisors is asking for the authorization to hire a Woodbury County Building Superintendent.

We are asking for discussion and action from the Board of Supervisors.

Woodbury County Sheriff's Office

LAW ENFORCEMENT CENTER
P. O. BOX 3715 SIOUX CITY, IOWA 51102

DAVID A. DREW, SHERIFF

PHONE: 712.279.6010
E-MAIL: ddrew@sioux-city.org
FAX: 712.279.6522

30 Apr 2015

To the Woodbury County Board of Supervisors & Human Resources Department,

The Woodbury County Sheriff's Office respectfully requests discussion and action on the authorization to hire for a part-time Courthouse Safety & Security position. We request this be placed on the agenda for the Tuesday, May 5, 2015 Woodbury County Board of Supervisors meeting. Thank you.

Sincerely,

David Drew

Dave Drew, Sheriff

Cc: file

WOODBURY COUNTY BOARD OF SUPERVISORS AGENDA ITEM(S) REQUEST FORM

Date: __April 29, 2015_____

Weekly Agenda Date: _May 5, 2015__

DEPARTMENT HEAD / CITIZEN: _____Supervisor Jeremy Taylor_____

SUBJECT:

ACTION REQUIRED:

Approve Ordinance ☐	Approve Resolution ☐	Approve Motion ☒
Give Direction ☐	Other: Informational ☐	Attachments ☐

WORDING FOR AGENDA ITEM: Action on approving Authorization to Hire including a revised Job Description for the Building Superintendent

EXECUTIVE SUMMARY: The Building Services Department County Superintendent is retiring at the end of June and the process should start in order to hire this critical position.

BACKGROUND: Comprehensive research has been conducted by the Human Resources Department on other county Building Services Department heads's job descriptions in counties such as Johnson, Polk, Pottawattamie, Blackhawk, and Linn as well as the City of Sioux City. This position will be instrumental in order to maintain, improve, and hold a standard of excellence for county buildings and grounds, especially as it relates to long-term planning.

FINANCIAL IMPACT: None at this time.

RECOMMENDATION: The Board approve a motion to authorize the hire of a Building Superintendent with the attached job description.

ACTION REQUIRED: Approved above recommendation by motion.

WOODBURY COUNTY
POSITION DESCRIPTION

Name:	_____	**Department:**	**County Building Services**
Title:	**County Building Superintendent**	**FLSA Designation:**	**Exempt**
Effective Date:	**April 2015**	**Reports to:**	**County Board of Supervisors**

Purpose:
The County Building Superintendent under the direct authority of the County Board of Supervisors performs administrative, supervisory and technical work involving the maintenance and repair of structural, plumbing, electrical, heating, and cooling systems for all County facilities. Maintains County facilities in a manner that prolongs facilities use while engaged in long-term planning with aligned budgets, promotes safe and healthy work environments, and maximizes energy efficiencies. The Building Superintendent assists in planning and coordinating activities concerned with the construction, modification, and maintenance of all County facilities as well as maintenance and improvement of building grounds. The position supervises and assists workers engaged in maintaining and repairing physical structures of the buildings and upkeep of grounds while maintaining necessary inventory for all maintenance and repairs.

Essential Functions and Responsibilities:
The following duties are typical for this position. These are not to be construed as exclusive or all inclusive. Other duties may be required and assigned.

- Be on call 24 hours per day to handle or consult on major maintenance problems and work a flexible schedule as needed
- Have sufficient personal mobility to complete field work at various county facilities
- Implement best practices for the effective operation of computer heating, ventilation, and air conditioning systems (HVAC)
- Prepare RFPs when necessary with good knowledge of bidding and procurement laws
- Represent Woodbury County and be responsible and accountable for the day to day operation of Building Service Department; perform duties in a professional and trustworthy manner
- Interpret, apply, and articulate departmental policies and procedures, collective bargaining agreement, and the employee handbook
- Responsible for the supervision of staff including selecting, training, motivating, instructing, firing, enforcing discipline, assigning and checking work results including providing performance evaluations.
- Sketch, layout, order materials, participate in and supervise the construction and maintenance programs while keeping an accurate inventory of all materials.
- Interpret technical and governmental regulations
- Attend all department meetings to communicate status and goals of the department as well as understand and assess the needs of other departments within the County
- Establish and maintain effective, professional working relationships with co-workers, employees, supervisors, elected officials/department heads, contractors, members of the public and the Board of Supervisors
- Develop preventative maintenance program to ensure cost effectiveness and longevity of equipment and to minimize disruptions in all operations within scope of responsibility; keep accurate records and reports of maintenance and work done on mechanical equipment
- Present information and respond to questions effectively including requests from the Board of Supervisors, employees, contractors, and members of the public
- Plan, schedule, assign, and perform work done on mechanical equipment and building, troubleshooting and analysis of equipment problems
- Maintain necessary inventory for all maintenance and repairs, oversee purchases and receive all maintenance and custodial supplies and equipment
- Develop and maintain an annual budget for the Building Services Department that is accurate, in accordance with Board of Supervisors goals, and prioritizes projects with the Capital Improvement Plan
- Make recommendations to the Board of Supervisors to improve quality operation of systems and equipment under their control
- Keep abreast of current state-of-art technical developments in the field of operation and engage in further professional development
- Responsible for planning and supervising work of outside contractors for major repairs, replacement, or renovation
- Review construction/renovation project plans for completeness, code conformance and cost effectiveness, and coordinates work with existing facilities to eliminate adverse operations
- Prepare all claims for payment within the department as wells as those claims for payment and those submitted by contractors and all other vendors
- Keep records and prepare work and time reports including being personally responsible for the timeliness of supervised employees
- Attendance is required

Non-Essential Functions and Responsibilities:

- Performs a variety of related duties in an efficient and thorough manner, under the direction of the County Board of Supervisors

Minimum Education and Experience Required Performing Essential Functions:

- Possess High School diploma or General Equivalency Degree (GED) and five (5) years of experience in building and grounds related work; or any equivalent combination of education and experience that provides the required knowledge and abilities. One (1) year supervisory experience preferred
- Basic principles of supervision to include approaches to discipline and training techniques
- Knowledge of building engineering as related to building design, construction, and maintenance valid State Certificate of registration as a licensed professional engineer
- Thorough knowledge of the methods and techniques commonly used in construction and maintenance activities including complex institutional heating, cooling, plumbing, and electrical systems, detention equipment,
- surveillance, elevator and fire alarm systems and methods to repair these systems
- Knowledge of State Code requirements as related to responsibilities and of the hazards ad safety precautions, regulations and standards related to facilities maintenance
- General Carpentry skills, janitorial, housekeeping, and grounds keeping procedures
- Blueprint reading; specifications and standards
- Good knowledge of applicable building codes
- Good knowledge in the use of personal computers and software packages
- Knowledge of management and budgetary principles
- Knowledge of building and equipment qualify to be bonded relating to the scope of responsibility
- Is of good moral character as determined by a thorough background investigation including a fingerprint search of local, state, and national files
- Must pass physical and psychological examination by County designated physicians
- Ability to tactfully and effectively communicate with others
- Knowledge of human relations, psychology, and personal maturity to maintain emotional stability in unusual
- situations of stress or social interaction pressure
- Ability to interpret and expedite all orders
- Ability to motivate, train, instruct, and supervise personnel
- Good knowledge of a continuous improvement models including the development of standard operating procedures.

Mental and Physical Competencies Required to Performing Essential Functions:

Language Ability

Ability to read and interpret documents such as safety rules, operating, and maintenance instructions, and procedure manuals and/or Iowa or County systems. Ability to write routine reports and correspondence. Ability to speak effectively before groups of customers or employees of the County in clearly spoken English. Ability to communicate Woodbury County policies to managerial and non-managerial groups in person and in writing. Ability to read and understand legal descriptions, policies, and procedures in written, oral, diagram and schedule form. Able by voice communications to express or exchange ideas by means of the spoken word in clearly spoken English. Have clarity of speech, hearing, and writing which permits effective communication and organize and presents factual information and ideas clearly and concisely, in oral and written form at Board meetings.

Mathematical Skills

Ability to add, subtracts, multiply, and divides in all units of measure, using whole numbers, common fractions, and decimals. Ability to compute rate, ratio, and percent and to draw or interpret graphs. Knowledge of basic bookkeeping principles. Knowledge of legislative requirements related to County systems. Knowledge of County principles and procedures.

Behavior Skills

Ability to begin work at the starting time without tardiness, absenteeism, or leaving work early without authorization or for good reason. Conduct or appearance in good keeping with a professional image and/or position of the County. Ability to read and understand the Work Rules of the County such as Bullying will not be tolerated, theft and dishonesty will not be tolerated, and disobedience, insubordination, or refusal to comply with reasonable instructions of authorized supervision will not be tolerated. Ability to cope with numerous time sensitive requests from County offices. Handle moderate levels of stress and meet deadlines appropriate to the position. Attendance is required.

Reasoning Ability

Ability to apply common sense understanding to carry out simple one or two stage instructions. Ability to deal with standardized situations with only occasional or no variables. Ability to apply common sense understanding to carry out detailed but uninvolved written or oral instructions. Ability to deal with problems involving a few concrete variables in standardizes situations. Ability to apply common sense understanding to carry out instructions furnished in written, oral, or diagram form.

Cognitive Demands
Ability to apply common sense understanding to carry out instructions furnished in written, oral, or diagram form. Ability to deal with problems involving several concrete variables in standardized situations. Ability to set priorities regarding assignments and follows through to completion; ability to establish and maintain effective working relationships with associates and the general public by means of clearly spoken English.

Equipment Used
Computer for data entry, spreadsheets and word processing, typewriter, multi-line phone, printers, fax machine, calculator (10 key), photo copier, mail process machine, possess knowledge of anything relating to County Building Services systems. Work requiring the exertion of up to 50-100 pounds with assistance of force occasionally, and operation of motor vehicles and equipment

Physical Demands
Typical office environment involving sitting, walking, occasional bending, lifting, and carrying paper and related light objects generally weighing 50-85 pounds or less and negligible amount of force frequently or constantly to move objects. Horizontal and vertical reaching motion is required. Aptitudes required are those typically associated with clerical operations including clerical, numerical, and forms perceptions, clarity of vision 20" or less to view computer screens and for preparing and analyzing written data and to determining the accuracy and thoroughness of work and observing general surrounds and activities, legal documents, and property descriptions cards; eye/hand/foot coordination, hand and finger dexterity, motor coordination, grasping and repetitive motions, hearing to perceive information at normal spoken word levels and conversation skills for expressing or exchanging ideas by means of the spoken word in clearly spoken English. Attendance required

Environmental Adaptability
Work is performed in all exposed environments and terrains while conducting field work. The employee is subject to adverse environmental conditions.

Special Requirements
Reasonable accommodations may be made to enable individuals with disabilities to perform the essential tasks. Possession of a valid appropriate driver's license and insurance. Candidate for hire must successfully pass a background check, (investigation including a fingerprint search of local, state and national files), psychological examination, a physical examination, vision, back screen and drug screening test prior to employment. The use of English for the skills and purposes of this job. Attendance is required.

I have carefully read and understand the contents of this job description. I understand the responsibilities, requirements, and duties expected of me. I understand that this is not necessarily an exhaustive list of responsibilities, skills, duties, requirements, efforts or working conditions associated with the job. While this list is intended to be an accurate reflection of the current job, the Employer reserves the right to revise the performed as directed by the Employer. I understand that I may be required to work overtime, different shifts or hours outside the normally defined workday or workweek.
I understand that my attendance is required. I also understand that this job description does not constitute a contract of employment nor alter my status as an at-will employee. I have the right to terminate my employment at any time and for any reason, and the Employer has a similar right.

_____ _____
Employee's Signature Date

_____ _____
Department Head Date

Woodbury County is an Equal Opportunity Employer. In compliance with the Americans with Disabilities Act, the County will consider reasonable accommodations for qualified individuals with disabilities and encourages prospective employees and incumbents to discuss potential accommodations with the Employer.

Federal and state laws prohibit employment and/or public accommodation discrimination on the basis of age, color, creed, disability, gender identity, national origin, pregnancy, race, religion, sex, sexual orientation or veteran's status. If you believe you have been discriminated against, please contact the Iowa Civil Rights Commission at 800-457-4416 or Iowa Department of Transportation's civil rights coordinator. If you need accommodations because of a disability to access the Iowa Department of Transportation's services, contact the agency's affirmative action officer at 800-262-0003.

#6C

WOODBURY COUNTY BOARD OF SUPERVISORS AGENDA ITEM(S) RE

Date: 4-30-15

Weekly Agenda Date: 5-05-15

DEPARTMENT HEAD / CITIZEN: Ed Gilliland

SUBJECT: Snow Cap Agreement

ACTION REQUIRED:

Approve Ordinance ☐	Approve Resolution ☐	Approve Motion ☒
Give Direction ☐	Other: Informational ☐	Attachments ☒

WORDING FOR AGENDA ITEM: Snow Cap Agreement, Discussion and Action

EXECUTIVE SUMMARY:

BACKGROUND:

FINANCIAL IMPACT: $2,550.00 for a 1 year agreement

RECOMMENDATION:

ACTION REQUIRED:

Approved by Board of Supervisors March 3, 2015.

SNOWCAP

Service Specification
For Woodbury County

Service Specification

Introduction

SNOWCAP Communication Solutions was developed to help facilitate communications when businesses, organizations and schools must close, dismiss early or postpone starting due to weather or other circumstances. We have been serving the greater Siouxland area for over 17 years with a proven track record of excellence, dependability and innovation.

Services offered

SNOWCAP will provide media notification for emergency and critical alert announcement notification. Media notification will be done via software interface with each local television and radio station. There shall be no limit to the number of recipient media outlets in each local broadcast region.

SNOWCAP will provide individual text and email notification delivery for individuals employed by Woodbury County The text and email feature shall be provided with unlimited monthly usage and there shall be no limit to the number of subscribers allowed to sign up to receive text and/ or email messages. Individuals may register as many mobile phones and email addresses as they choose with no additional cost to Woodbury County

SNOWCAP will provide phone voice calling to a specified number of recipients. Registered phone numbers are not limited to landlines and may include, but not limited to, cellular phones, PDAs, VoIP. Voice messaging shall be for unlimited monthly use. SNOWCAP will provide online, real-time reporting for voice call notification which will include, total number of calls made, number of attempts per phone number, live answer or machine, list of non-working numbers and name attached to that number, list of unsuccessful contacts. Additional blocks of numbers can be purchased at any time during the yearly contract term without penalty and at the price listed in this document.

Woodbury County will have unlimited group and subgroup capabilities for texting, email and voice calling at no additional fee for the duration of contract term.

SNOWCAP will provide 24 hour customer support. If the account administrator is unable to access the internet to post and alert notice, they can call our office and someone will be happy to enter the information for them after correctly answering the security question they submitted at the time of registration of the account, group or subgroup.

For added coverage, SNOWCAP will provide a link to upload an RSS feed to your organization's website that is continually updated with your latest announcement.

All upgrades and enhancements made to the SNOWCAP system will be automatically transferred and downloaded into your account server at no additional cost during the term of your contract.

Fees, payments, and service terms

Service Contracts are based on a 12 month term and will be renewed automatically each year on the anniversary date unless terminated upon 30 days prior written notice. Discounts will apply for contracts signed for multiple years.

SNOWCAP Media Notification Services for each local broadcast region	**$350**
Unlimited Text and Email Messaging for each account	**$150**
Voice Messaging – 500 phone number block	**$2252**
Real-time Report Generator	**Free**
Unlimited Group and Sub-Group Accounts	**Free**
Upgrades and Enhancements	**Free**
Additional Block of 50 Numbers	$400
Additional Block of 100 Numbers	$756
Additional Block of 200 Numbers	$1188
Individual Text/Email Data Entry and Validation (optional)	.50 per name

Total service payment	Fees	Service term	Payment schedule	Primary contact at Woodbury County
$2,550.00 (includes services in bold print)	Discounts and Fees Included in Total	1yr	Single Payment	Chairperson of the Board of Supervisors or his or her designee

Accurate information

All account information for Woodbury County Corp will come from your account administrator and it is the responsibility of your account administrator to keep your company information accurate and up-to-date. You will be notified in writing prior to any major upgrade or service enhancement, or any time the system will be inoperable for a period of time. During these times, should you need to post an alert, you may do so by calling our office and speaking with a customer support specialist.

Privacy statement

It is the practice of SNOWCAP, LLC to maintain the privacy of all of our customers. We do not and will not sell your information to a third party or release any information to an outside entity under an circumstance unless it is by written court order requiring us to do so.

Ownership

SNOWCAP retains ownership of all software, plug-ins, database information and any other aspect of operation of SNOWCAP Communication Solutions and SNOWCAP, LLC. Upon termination of the contract between Woodbury County Corporation and SNOWCAP, all account information shall remain in the possession of SNOWCAP's database for no less than 5 years.

Disclaimer

PLEASE READ THIS DOCUMENT CAREFULLY. IT CONTAINS VERY IMPORTANT INFORMATION ABOUT YOUR RIGHTS AND OBLIGATIONS, AS WELL AS LIMITATIONS AND EXCLUSIONS THAT MAY APPLY TO YOU. THIS DOCUMENT CONTAINS A DISPUTE RESOLUTION CLAUSE.

Key to terminology:

- Buyer, Purchaser, User shall be referred to as the "Customer";
- SNOWCAP, LLC, its affiliates, and its entities shall be known as the "Company";
- Annual Subscription, Notification Services, etc shall be known as "Product".

Customer

- Must be over 18 years of age.
- Customer agrees to purchase annual subscription to SNOWCAP media notification services and pay the annual subscription fee.
- Customer has the authority to make purchase.
- Customer agrees not to copy materials on the site, not to reverse engineer or break into the site, and not to use the website materials, products or services to violate law.
- Customer agrees to use the site as per the instructions, not to disclose his password to others for use, and that the site has a license for use of anything the user submits or posts to the site.
- Customer understands that the use of this site is at the discretion of the company and that any use by anyone may be terminated by the company at any time.

Product

- Access information will only be released after payment is received.
- No discounts will be given unless otherwise stated.
- Subscription rate stated in site is in effect until changed or updated at the discretion of the company unless otherwise stated.
- Please do not hesitate to contact us if there are questions regarding our product.

Payment

- Major Credit Cards (Visa/Master Card, Discover)
- Business Check
- Electronic Check (Automatic Bank Draft)

Service and Support

- The company will provide customer support to customers in the United States, in accordance with the then-current customer support policies in effect.

Limitation of Liability and Site Postings

The company does not accept liability beyond the remedies set forth herein, including any liability for failure of system notification, product not being available for use or for lost or corrupted data or software, or the provision of services and support. The company will not be liable for lost profits, loss of business or the consequential, special, indirect, or punitive damages, even if advised of the possibilities of such damages, or for any claim by any third party except as expressly provided herein. Customer agrees that for any liability related to the purchase of product or services. The company will not be liable for content entered into the system by its customers for broadcast that is considered to be libelous, obscene or infringing of a copyright or trademark. The company is not liable or responsible for any amount of damages above the aggregate dollar amount paid by customer for the purchase of product or services under this agreement. The company retains the right to disclose user information to law enforcement authorities or as a result of subpoena.

Binding Arbitration

Any claim, dispute, or controversy (whether in contract, tort, or otherwise, whether preexisting, present or future, and including statutory, common law, intentional tort and equitable claims) against the company, its agents, employees, successors, assigns or affiliates (collectively for purposes of this paragraph, the company) arising from or relating to this Agreement, its interpretation, or the breach, termination or validity thereof, the relationships which result from this Agreement (including, to the full extent permitted by applicable law, relationships with third parties who are not signatories to this Agreement), the company's advertising, or any related purchase shall be resolved exclusively and finally by binding arbitration administered by the National Arbitration Forum (NAF) under its Code of Procedure then in effect (available via the Internet at http://www.arb-forum.com , or via telephone at 1-800-474-2371). The arbitration will be limited solely to the dispute or controversy between Customer and the company. Any award of the arbitrator(s) shall be final and binding on each of the parties, and may be entered as a judgment in any court of competent jurisdiction. Information may be obtained and claims may be filed with the NAF at P.O. Box 50191, Minneapolis, MN 55405.

Applicable Law

- Not For Resale or Export.
- Customer agrees to comply with all applicable laws and regulations of the various states and of the United States.
- Customer agrees and represents that it is buying for its own internal use only, and not for resale or export.

Changes to Terms and Conditions

The company reserves the right to amend the Terms and Conditions at any time without prior notice. The company may also refuse to provide service or process a transaction to anyone for any reason at our sole discretion. The company also reserves the right to make any amendments for any part of the website. All amendments will be of immediate effect upon update. By using our site, you are agreeing to the latest Terms and Conditions stated.

Indemnity

By agreeing to these Terms and Conditions, the customer releases the company to seek legal action against the customer for any costs the company is forced to pay resulting from a claim due to the customer's actions.

Signatures

SNOWCAP Communications Solutions Representative _____ Date _____

Chairperson of the Board of Supervisors, Woodbury County _____ Date _____

#6d

WOODBURY COUNTY BOARD OF SUPERVISORS AGENDA ITEM(S) REQ

Date: 4-30-15

Weekly Agenda Date: 5-05-15

DEPARTMENT HEAD / CITIZEN: Chairman Mark Monson

SUBJECT: Resolution for Outstanding Citizen

ACTION REQUIRED:

Approve Ordinance ☐	Approve Resolution ☐	Approve Motion ☐
Give Direction ☐	Other: Informational ☒	Attachments ☒

WORDING FOR AGENDA ITEM: Presentation of Resolution Thanking and Commending Harlan Salvatori for Service to Woodbury County.

EXECUTIVE SUMMARY:

BACKGROUND:

FINANCIAL IMPACT:

RECOMMENDATION:

ACTION REQUIRED:

Approved by Board of Supervisors March 3, 2015.

WOODBURY COUNTY, IOWA

RESOLUTION NO. 12,168

A RESOLUTION THANKING AND COMMENDING

Harlan Salvatori

FOR YOUR SERVICE TO WOODBURY COUNTY

WHEREAS, Harlan Salvatori has demonstrated himself to be as an outstanding citizen of Woodbury County by volunteering many hours unselfishly for years; and

WHEREAS, the service given by Harlan Salvatori as a Woodbury County citizen, has been characterized by his dedication to the best interests of the citizens of Woodbury County; and

NOW THEREFORE, BE IT RESOLVED BY THE BOARD OF SUPERVISORS OF WOODBURY COUNTY, IOWA that the undersigned members of this Board thank and commend Harlan Salvatori for his years of service to Woodbury County; and

BE IT FURTHER RESOLVED that it is the wish of all those signing below that the future hold only the best for this very deserving person, Harlan Salvatori.

BE IT SO RESOLVED this 5 day of May.

WOODBURY COUNTY BOARD OF SUPERVISORS

Mark A. Monson, Chairman	Jaclyn D. Smith, Member
Larry D. Clausen, Member	Jeremy J. Taylor, Member
Matthew A. Ung, Member	Attest: Patrick F. Gill, Woodbury County Auditor

AHLERS & COONEY, P.C.
100 COURT AVENUE, SUITE 600
DES MOINES, IOWA 50309-2231
FAX: 515-243-2149
WWW.AHLERSLAW.COM

#7

R. Mark Cory
RCory@ahlerslaw.com

April 27, 2015

Via Email and UPS Next Day Delivery
Michael R. Clayton
County Treasurer
Woodbury County Courthouse
620 Douglas Street
Sioux City, IA 51101-1248

Re: Woodbury County, State of Iowa - General Obligation Capital Loan Notes, Series 2015

Dear Mike:

We enclose suggested proceedings to be acted upon by the Board on the date fixed for the hearing on the authorization to enter into a loan agreement and the issuance of the above mentioned notes, pursuant to the provisions of Code Sections 331.402 and 331.443. A certificate to attest the proceedings is also enclosed.

The proceedings are prepared to show as a first step the receipt of any oral or written objections from any resident or property owner to the proposed action of the Board to enter into a loan agreement and issue the notes. A summary of objections received or made, if any, should be attached to the proceedings. After all objections have been received and considered if the Board decides not to abandon the proposal to issue the notes, a form of resolution follows that should be introduced and adopted, entitled "Resolution Instituting Proceedings to Take Additional Action for the Issuance of Not To Exceed $900,000 General Obligation Capital Loan Notes."

Also enclosed is an extra copy of the proceedings to be filled in as the original and certified back to this office.

Action Must Be Taken At The Hearing.

The Board is required by statute to adopt the resolution instituting proceedings to enter into a loan agreement and issue the notes at the hearing or an adjournment thereof. If necessary to adjourn, the minutes are written to accommodate that action.

In the event the Board decides to abandon the proposal, then the form of resolution included in the proceedings should not be adopted. We would suggest that, in this event, a motion merely be adopted to the effect that such proposal is abandoned.

Section 331.443 of the Code provides that any resident or property owner may appeal the decision to take additional action to the District Court for the County within 15 days after the additional action is taken. The additional action is final and conclusive unless the court finds that the Board exceeded its authority.

In the event an appeal is filed by any resident or property owner, please see that we are notified immediately; and, as soon as available, a copy of the notice of appeal should be furnished our office for review.

If you have any questions pertaining to the proceedings enclosed or this letter, please do not hesitate to either write or call.

Very truly yours,

R. Mark Cory
FOR THE FIRM

RMC:csm
Enclosures
cc: Jean Jessen
Dennis Butler

01106308-1\18799-022

(This Notice to be posted)

NOTICE AND CALL OF PUBLIC MEETING

Governmental Body:	The Board of Supervisors of Woodbury County, State of Iowa.
Date of Meeting:	May 5, 2015.
Time of Meeting:	4:40 o'clock P.M.
Place of Meeting:	Board Room, Woodbury County Courthouse, 620 Douglas Street, Sioux City, Iowa.

PUBLIC NOTICE IS HEREBY GIVEN that the above mentioned governmental body will meet at the date, time and place above set out. The tentative agenda for the meeting is as follows:

Not to Exceed $900,000 General Obligation Capital Loan Notes

- Public hearing on the authorization of a Loan Agreement and the issuance of Notes to evidence the obligation of the County thereunder.
- Resolution instituting proceedings to take additional action.

Such additional matters as are set forth on the additional _____ page(s) attached hereto.
(number)

This notice is given at the direction of the Chairperson pursuant to Chapter 21, Code of Iowa, and the local rules of the governmental body.

_____

County Auditor, Woodbury County, State of Iowa

May 5, 2015

The Board of Supervisors of Woodbury County, State of Iowa, met in _____ session, in the Board Room, Woodbury County Courthouse, 620 Douglas Street, Sioux City, Iowa, at _____ _____.M., on the above date. There were present Chairperson _____, in the chair, and the following named Board Members:

_____

_____

Absent: _____

* * * * * * *

The Chairperson announced that this was the time and place for the public hearing and meeting on the matter of the authorization of a Loan Agreement and the issuance of not to exceed $900,000 General Obligation Capital Loan Notes, in order to provide funds to pay the costs of public buildings, including equipment, remodeling, reconstruction and additions or extensions to the buildings, for essential county purposes, and that notice of the proposed action by the Board to institute proceedings for the authorization of the Loan Agreement and the issuance of the Notes had been published as provided by Sections 331.402 and 331.443 of the Code of Iowa.

The Chairperson then asked the Auditor whether any written objections had been filed by any resident or property owner of the County to the issuance of the Notes. The Auditor advised the Chairperson and the Board that _____ written objections had been filed. The Chairperson then called for oral objections to the issuance of the Notes and _____ were made. Whereupon, the Chairperson declared the time for receiving oral and written objections to be closed.

(Attach here a summary of objections received or made, if any)

Whereupon, the Chairperson declared the hearing on the authorization of entering into a Loan Agreement and the issuance of the Notes to be closed.

The Board then considered the proposed action and the extent of objections thereto.

Whereupon, Board Member _____ introduced and delivered to the Auditor the Resolution hereinafter set out entitled "RESOLUTION INSTITUTING PROCEEDINGS TO TAKE ADDITIONAL ACTION FOR THE ISSUANCE OF NOT TO EXCEED $900,000 GENERAL OBLIGATION CAPITAL LOAN NOTES", and moved:

☐ that the Resolution be adopted.

☐ to ADJOURN and defer action on the Resolution and the proposal to institute proceedings for the issuance of notes to the meeting to be held at _____ _____.M. on the _____ day of _____, 2015, at this place.

Board Member _____ seconded the motion. The roll was called and the vote was,

AYES: _____

_____

NAYS: _____

Whereupon, the Chairperson declared the measure duly adopted.

RESOLUTION INSTITUTING PROCEEDINGS TO TAKE ADDITIONAL ACTION FOR THE ISSUANCE OF NOT TO EXCEED $900,000 GENERAL OBLIGATION CAPITAL LOAN NOTES

WHEREAS, pursuant to notice published as required by law, the Board of Supervisors has held a public meeting and hearing upon the proposal to institute proceedings for the authorization of a Loan Agreement and the issuance of not to exceed $900,000 General Obligation Capital Loan Notes, for the essential county purposes, in order to provide funds to pay the costs of public buildings, including equipment, remodeling, reconstruction and additions or extensions to the buildings, and has considered the extent of objections received from residents or property owners as to the proposed issuance of Notes; and following action is now considered to be in the best interests of the County and residents thereof.

NOW, THEREFORE, BE IT RESOLVED BY THE BOARD OF SUPERVISORS OF WOODBURY COUNTY, STATE OF IOWA:

Section 1. That this Board does hereby institute proceedings and take additional action for the authorization and issuance in the manner required by law of not to exceed $900,000 General Obligation Capital Loan Notes, for the foregoing essential county purposes.

Section 2. This Resolution shall serve as a declaration of official intent under Treasury Regulation 1.150-2 and shall be maintained on file as a public record of such intent. It is reasonably expected that the general fund moneys may be advanced from time to time for capital expenditures which are to be paid from the proceeds of the above Notes. The amounts so advanced shall be reimbursed from the proceeds of the Notes not later than eighteen months after the initial payment of the capital expenditures or eighteen months after the property is placed in service. Such advancements shall not exceed the amount authorized in this Resolution unless the same are for preliminary expenditures or unless another declaration of intention is adopted.

PASSED AND APPROVED this 5th day of May, 2015.

_____
Chairperson

ATTEST:

_____
County Auditor

CERTIFICATE

STATE OF IOWA)
) SS
COUNTY OF WOODBURY)

I, the undersigned County Auditor of Woodbury County, State of Iowa, do hereby certify that attached is a true and complete copy of the portion of the records of the County showing proceedings of the Board, and the same is a true and complete copy of the action taken by the Board with respect to the matter at the meeting held on the date indicated in the attachment, which proceedings remain in full force and effect, and have not been amended or rescinded in any way; that meeting and all action thereat was duly and publicly held in accordance with a notice of public hearing and tentative agenda, a copy of which was timely served on each member of the Board and posted on a bulletin board or other prominent place easily accessible to the public and clearly designated for that purpose at the principal office of the Board (a copy of the face sheet of the agenda being attached hereto) pursuant to the local rules of the Board and the provisions of Chapter 21, Code of Iowa, upon reasonable advance notice to the public and media at least twenty-four hours prior to the commencement of the meeting as required by law and with members of the public present in attendance; I further certify that the individuals named therein were on the date thereof duly and lawfully possessed of their respective county offices as indicated therein, that no vacancy existed except as may be stated in the proceedings, and that no controversy or litigation is pending, prayed or threatened involving the incorporation, organization, existence or boundaries of the County or the right of the individuals named therein as officers to their respective positions.

WITNESS my hand and the seal of the Board hereto affixed this _____ day of _____, 2015.

_____
County Auditor, Woodbury County, State of Iowa

(SEAL)

01106310-1\18799-022

#8

WOODBURY COUNTY, IOWA
BOARD ADMINISTRATION
MEMORANDUM

TO: Board of Supervisors

FROM: Karen James, Administrative Coordinator

RE: Consideration of A Petition For A Tax Suspension

DATE: May 1, 2015

Please consider this request for a tax suspension for P. H. If the Board approves this request, the suspension resolution requires the chairman's signature.

#9

WOODBURY COUNTY BOARD OF SUPERVISORS AGENDA ITEM(S) REQ

Date: 4/28/15/2014

Weekly Agenda Date: 5/5/15

DEPARTMENT HEAD / CITIZEN: Mark Olsen; Juvenile Detention Director

SUBJECT: Chairman to sign contract for PREA (Prison Raped Elimination Act) Training

ACTION REQUIRED:

Approve Ordinance ☐	Approve Resolution ☐	Approve Motion ☒
Give Direction ☐	Other: Informational ☐	Attachments ☐

WORDING FOR AGENDA ITEM:

Discussion and approval for chairman's signature to enter into a contact to authorize web based staff training

EXECUTIVE SUMMARY:

The federal government has mandated that all locked centers go through a training program that teaches how to identify report, investigate and stop sexual assaults from happening in lock units. It originally stated for prisons, later jails and is now focusing on detention programs. If Woodbury County does not become PREA Certified we could lose our federal monies through the BIA.

BACKGROUND: Nationally Prisons, Jails and Detention Centers are being federally mandated to receive PREA training for all staff. I recommend that we utilize the Educorr group to provide web based PREA Training. They will be able to identify that each staff person has been certified, keep all necessary records and will work with us closely to confirm we are meeting all of PREA requirements. Joshua Widman has reviewed the contract several times and made sure it met all the necessary requirements.

FINANCIAL IMPACT:

Four managers will initially be trained. The cost per person is $59.00 from the date of the executed contract or $236.00. By using web based training it will allow staff to be trained on site without managing over-time.

RECOMMENDATION:

I would recommend the board approve the training with Educorr to provide federally mandated training to the staff of the detention center without paying over-time.

ACTION REQUIRED: Chairman's signature.

Approved by Board of Supervisors March 3, 2015.

515-725-5701

IOWA Department of Corrections

Offender
OFFENDER INFORMATION
DAILY STATISTICS
VISITING HOURS

General Information
OFFENDER TELEPHONE SERVICES
OFFENDER BANKING
O'MAIL
OFFENDER FAMILY & FRIENDS
ORGANIZATION CHART
INSTITUTIONS / DISTRICTS
POLICIES
PUBLICATIONS / REPORTS
RESEARCH
PRESS RELEASES
ATTORNEYS
BOARD OF CORRECTIONS

Programs
VICTIM SERVICES / RESTORATIVE JUSTICE
OFFENDER REENTRY
BENEFITS OF HIRING OFFENDERS
LEARNING CENTER
PRISON INDUSTRIES
AFFIRMATIVE ACTION
PRISON RAPE ELIMINATION ACT

Misc.
ADMINISTRATIVE RULES
REQUEST FOR PROPOSAL
VISION, MISSION, VALUES AND BELIEFS

Prison Rape Elimination Act (PREA)

Congress enacted the Prison Rape Elimination Act in 2003 (PREA). The purposes of the Act are to establish a zero-tolerance policy regarding rape in prisons, jails, police lock-ups, and other confinement facilities by developing and implementing national standards for the detection, prevention, reduction, and punishment of prison rape. The Act also calls for an increase in the efficiency and effectiveness of state and local officials in investigating and prosecuting prison rape.

The Act applies to all public and private institutions that house adult or juvenile offenders and to community-based correctional agencies.

To comply with the Act, the Iowa Department of Corrections and the Judicial District Departments of Correctional Services are committed to:

- Practice zero tolerance for any type of sexual violence and/or sexual misconduct committed by offenders and employees.
- Ensure executive level commitment to the prevention of sexual violence and sexual misconduct and provide a safe environment for staff, offenders, and visitors.
- Establish central coordination and oversight of all duties and activities related to addressing sexual misconduct/sexual violence and insuring compliance with requirements and intent of the Prison Rape Elimination Act statewide to ensure a systemic and systematic approach.

Annual Reports

PREA Audit Reports

Third Party Reporting

How to Report

©2002-2015 Iowa Department of Corrections,
Advanced Technologies Group, LLC

Educorr

PREA Online Training and PREA information and resources

Category Archives: PREA history

Why We Like PREA (and you should too)

March 6, 2014 PREA history, PREA information PREA, Prison Rape Elimination Act

PREA is about more than the governor's certification of state compliance. PREA is a human rights issue. We as a society don't accept rape as acceptable – whether it is in a dorm room, in a dark alley, in a house. Rape and sexual abuse are not acceptable anywhere, and are not acceptable for inmates in the custody of law enforcement. Rape and sexual abuse are never part of an inmate's sentence to serve.

@iqoncept/bigstockphoto.com

Additionally, even if a facility is not party to the 5% grant penalty (as part of the governor's certification process), that does not mean that the facility would not be penalized by lawsuits claiming the agency did not protect the inmates according to PREA standards. Agencies know that PREA and its standards are in existence, and to decide they "won't be compliant" leaves them open to claims of deliberate indifference, as well as claims that inmates' 8th Amendment rights were violated.

Sexual safety of a facility is part of the overall safety of the facility. Where inmate sexual assaults and sexual abuse happen, there is generally other safety concerns. For example, when a staff member becomes sexually involved with inmates, there are cases of those inmates being granted access to areas of the facility where they should not, cases where inmates have had contraband smuggled into the facility by staff members. In the case of inmate on inmate sexual victimization where there is sexual victimization, there are still facility safety concerns – like inmate gang affiliation (gang members inside detention facilities have a higher rate of perpetrating inmate sexual assaults while incarcerated), inmate bribery, inmate intimidation.

As mentioned above, facilities with the lowest PREA related incidents also enjoy the benefits of a more safe facility.

Inmates who have been sexually victimized during their incarceration bring their emotional trauma and medical conditions back into the community with them. They have a more difficult time maintaining a job, more likely to become homeless, and have an increased rate of recidivism.

In addition to the devastating impact on the inmate themselves following an incident of sexual victimization, there are negative outcomes reaching beyond the inmate.

Among the negative outcomes are:

- Increased costs of health care
- Reduction in effectiveness of disease control (HIV, Hep B, other STD's)
- Bad press for the facility, facilities seen as unprofessional
- Creates more violence
- Increased recidivism, civil strife, violent crimes
- Compounds and increases mental illness
- Increases PTSD
- Leads to more victims
- Compromises public health and safety

Additionally, PREA benefits the inmates, correctional staff, volunteers, vendors, families, the community at large, and society as a whole. Those benefits include:

- A safer work environment
- Component of the overall safety and security in a facility
- Reduces liability and embarrassment for facility and staff
- Increases Public Health and Public Safety
- Reduces medical care costs of inmates
- Sexual safety in a facility is Safety & Security for a facility
- PREA Standards are part of the baseline for best correctional practices

Bottom line, PREA heightens awareness of the acceptable conduct for inmates and those interacting with inmates. It lets everyone know that sexual victimization is not part of serving time. It is important to report it. Sexual victimization behind bars is just as wrong as sexual victimization in free society, and is not acceptable anywhere at any time.

hope you have a good day, and be safe!

Best wishes,

DeeDee Armstrong Director of Training and Client Relations Educorr Online PREA Training
www.Educorr.com info@Educorr.com 3121 St. Croix Trail S. Suite 100 Afton, MN 55001 651-321-0880 – office
651-246-6192 – direct/ cell

p.s. **Educorr would like to work with you on PREA training.** Use this handy link to connect to us: http://landing.educorr.com/landing7/

Want to talk more about PREA and its impact on facilities? There's a great group on LinkedIn for just that. Join the PREA group and post your comments, questions, best practices and thoughts. Here's the link: http://www.linkedin.com/groups/PREA-Prison-Rape-Elimination-Act-6519692/about

Have we connected on LinkedIn? Do that here: http://www.linkedin.com/pub/deedee-armstrong/26/357/107/

A Short History of PREA

January 10, 2014 PREA history PREA, Prison Rape Elimination Act

The history of how PREA (Prison Rape Elimination Act) came to be can shed some light on why PREA was passed in the first place. Knowing why something became a law usually helps inform the purposes and answers many of the 'Why' questions that come up.

In 2001, Human Rights Watch released a paper, *No Escape: Male Rape in U.S. Prisons*. The release of that paper encouraged action and discussion on a national level.

The paper surveyed 34 states' prison systems and documented in gruesome detail accounts of prisoner rape and sexual abuse. The study was then featured on the front page of *The New York Times*, and later other publications.

Several court cases also lead to PREA's passage. These cases directly influenced the shaping of PREA's policy. Here are a few noteworthy cases, and their impact.

The case most often cited as most influential in leading to the passage of PREA is the **1994 case of Farmer v. Brennan**. Dee Farmer, a male-to-female transsexual, was incarcerated with the general male population in a US Penitentiary in Indiana. While there, she was repeatedly raped and beaten by other inmates. She acquired HIV because of these rapes. In the court filing, she claimed that the prison administration should have known that she was particularly vulnerable to sexual violence she was transsexual.

The US Supreme Court ruled in her favor. It agreed that it was the responsibility of prison officials to prevent prisoners from harming each other, to the point where prison officials who were "deliberately indifferent" were ruled liable under the Eighth Amendment. However, the court did not make prison officials liable for all violence between inmates.

The Eighth Amendment says: *"Excessive bail shall not be required, nor excessive fines imposed, nor cruel and unusual punishments inflicted."*

This was the first case where the US Supreme Court addressed prisoner rape.

The case of **Women Prisoners of DC Department of Corrections v. District of Columbia, 1994**, was filed by a group of women prisoners in the District of Columbia. The inmates claimed that their constitutional rights had been violated by sexual abuse from prison staff. The women inmates claimed the male staff had used physical force and threats of physical force to make them engage in sexual activity. They also claimed that the male prison staff invaded their privacy by entering their living areas without announcing their presence, sexually harassed them, raped them, and created a hostile, sexualized environment. The women claimed this hostile sexualized environment worsened the negative effects of the abuse that most of these women had suffered in their personal lives before they got to jail. The court found in favor of the women inmates on grounds that their 8th Amendment Rights had been violated.

The case of **Neal v Michigan** and **Anderson v Michigan, (both 1997)**, were two class action suits filed against the Michigan Department of Corrections. The cases involved over 500 women inmates and former inmates claiming repeated rape and other sexual abuse by prison staff while incarcerated in two Michigan correctional facilities.

These suits were not filed against the guards at the facilities, but against the Michigan Department of Corrections and its administrative personnel. As one of the attorneys representing the women put it, "Although you may not have known that Guard A was assaulting Prisoner A, you had enough notice of a sexually pervasive prison environment that appropriate action should have been taken."

The case was filed in 1997, but was finally settled in 2008. The settlement amount was $100 million for the women. The settlement was paid by the State of Michigan and its taxpayers.

PREA (Prison Rape Elimination Act) was backed by a number of groups, including Just Detention International, the Southern Baptist Ethics & Religious Liberty Commission, Amnesty International USA, Focus on the Family, Human Rights Watch, NAACP, National Association of Evangelicals, Salvation Army and many other groups. It was co-sponsored by a bipartisan group of Democrats and Republicans in Congress and was passed by unanimous consent in the House and Senate, and signed into law by George W. Bush in 2003.

PREA was passed as a result of the attention from these cases and the paper, *No Escape: Male Rape in U.S. Prisons.*

Be safe,
DeeDee

Want to talk more about PREA and its impact on facilities? There's a great group on LinkedIn for just that. Join the group and post your comments, questions, best practices and thoughts. Here's the link: http://www.linkedin.com/groups/PREA-Prison-Rape-Elimination-Act-6519692/about

Educorr PREA training highlights and Proposal for Woodbury County Juvenile Detention, IA

Educorr's PREA training is an online training. All courses are taken at the participant's convenience, available 24/7. This benefits the participant, and the facility. The facility does not need to schedule overtime, coordinate schedules, or pay overtime for taking the training.

Training is available on an ongoing basis. As additional volunteers or staff are added to the facility, they can enroll in the training immediately, it does not need to be scheduled.

All progress is tracked online. Participants may log out, and log back in to the same place that they were when they logged out.

Designed to meet training standards 115.331 and 115.332 of PREA (covers all areas required by those standards.

Administrative tools to help meet PREA audit standard 115.393 including tracking of each staff member, volunteer, vendor and contractor for PREA training. All records are maintained electronically, in "the cloud" for easy access to records 24/7 by administration.

Enrollees receive a course completion certificate showing successful completion of course. Facility also has record of all enrollees completion through the administrative dashboard on Educorr's website.

Customizable for facilities to add electronic acknowledgement of their specific PREA policies and procedures (Standards 115.331 and 115.332). If the facility has their own PREA policy, this can be linked to the facility's access code, and electronic acknowledgement become a required component of the training.

Standardized training. The facility can be certain that all staff receive the same information, so there is no discrepancy of training materials covered by different trainers/ different sessions.

Reminder alerts for staff who are due for annual refreshers or annual policy acknowledgements. Educorr will alert the facility when staff members are due for their bi-annual PREA refresher course or their bi-annual PREA Policy update.

Affordably priced, with bulk pricing and 90-day introduction packages available.

Refresher Courses. As part of fulfilling Standard 115.331, Educorr's training includes annual or bi-annual refresher courses for Corrections Staff. We alert facility management when refresher courses are due for employees.

CE Credits. CE credits may be obtained for this course. If you are interested in CE or POST credit, please contact your Educorr representative.

Different courses are available. They are:

Course	Designed for	Average time to complete course
Staff	CO's, management, supervisors, other staff	4 hours
Volunteers*	Chaplains, Programs volunteers, all volunteers with inmate contact	2 hours
Contractors/ Vendors*	Food Service contractors, transportation contractors, commissary contractors, etc.	2 hours
Contractors/ Vendors – Limited Inmate Contact*	Contractors with limited inmate contact – telephone servicers, fire suppressant inspectors, surveillance system servicers	1 hour
Bi-Annual Refreshers	Designated for facility paid staff	1 hour

*The vendor courses are generally paid for by the vendor company, rather than the facility. Some facilities ask their volunteers to pay for their own training, while others provide the training to them.

Facilities may designate the payment arrangements. Optional methods of payment: pre-purchase a package of training (for example 20 sessions), pay individually by credit card, pay a monthly invoice for all enrollees during the month (net 30 terms).

Account creation is done by executing a contract with Educorr and completing an account set-up worksheet. Following these steps, Educorr will generate a unique access code for all participants associated with the facility to use to enroll in the courses. From time of contract execution and receipt of set up worksheet to the time enrollees may start taking courses is generally 24 hours or less.

Highlights of Educorr's PREA Online Training Courses

Course Features (Standards Met are noted)	Vendor - Limited youthful offender	Standard Vendor	Volunteer	Correctional Officer/ Facility Employee	Staff Refresher Course
Accessible 24/7 via internet	✓	✓	✓	✓	✓
Record of participation and course passage stored in the cloud, available for facility to provide PREA auditor (115.393)	✓	✓	✓	✓	✓
Average time to complete course	1 Hour	2 Hours	2 Hours	4 Hours	1 Hour
Progress quizzes throughout course to check for understanding of material	✓	✓	✓	✓	✓
Final exam requiring 80% passing score	✓	✓	✓	✓	✓
Actual cases from the news presented to illustrate subject matter, tailored to specific participant's course	✓	✓	✓	✓	✓
Statistics and information specific to youthful offender sexual victimization from Bureau of Justice Statistics	✓	✓	✓	✓	✓
Facility specific PREA policy can be electronically presented, and acknowledgment/ agreement electronically verified for participants (115.311, 115.331, 115.332)	✓	✓	✓	✓	✓

Highlights of Educorr's PREA Online Training Courses

Course Features (Standards Met are noted)	Vendor - Limited youthful offender	Standard Vendor	Volunteer	Correctional Officer/ Facility Employee	Staff Refresher Course
History and purposes of PREA presented	✓	✓	✓	✓	
Zero Tolerance detailed and participants role explained (115.331, 115.332)	✓	✓	✓	✓	✓
Participants trained on their responsibilities to prevent, detect, report and respond to youthful offender sexual victimization (115.331, 115.332)	✓	✓	✓	✓	✓
Participants trained on youthful offenders' right to be free from sexual abuse and sexual harassment (115.331)	✓	✓	✓	✓	✓
Participants trained on right of youthful offenders and staff to be free from retaliation for reporting sexual abuse and sexual harassment (115.331)	✓	✓	✓	✓	✓
How to avoid inappropriate relationships with youthful offenders (115.331, 115.332)		✓	✓	✓	✓
Understanding of how to report an youthful offender sexual victimization incident (115.361)	✓	✓	✓	✓	✓
Understanding of consequences of youthful offender sexual victimization (115.331, 115.332)	✓	✓	✓	✓	✓
Common Reactions to sexual victimization (115.331)				✓	✓
Reality based scenario quizzes				✓	✓
Best practices for communication with youthful offenders (115.331)				✓	✓

Highlights of Educorr's PREA Online Training Courses

Educorr's PREA Training for Corrections Staff includes the following units:

1. PREA INTRODUCTION, HISTORY, DEFINITIONS
2. SURVEYS AND STATISTICS, OVERVIEW OF SCOPE OF SEXUAL VICTIMIZATION OF YOUTHFUL OFFENDERS
3. PREA STANDARDS
4. ADOLESCENT BRAIN DEVELOPMENT/ ADOLESCENT YOUTHFUL OFFENDER CHARACTERISTICS
5. YOUTHFUL OFFENDER CULTURE AND CHARACTERISTICS OF YOUTHFUL OFFENDER SEXUAL VICTIMIZATION
6. YOUTHFUL OFFENDER SEXUAL VICTIMIZATION THROUGH STAFF MISCONDUCT
7. RESPONSES AND RESPONSIBILITIES OF STAFF TO SEXUAL MISCONDUCT
8. EFFECTS OF A SEXUAL VICTIMIZATION INCIDENT
9. PREA MYTHS / FACTS AND
10. BEST PRACTICES IN YOUTH SETTING

Overall Course Objectives are as follows:

At the completion of this course, participants will:

- Understand the history of PREA
- Describe the purpose and implications of PREA
- Restate terms and definitions which are part of PREA
- Understand the scope and characteristics of sexual victimization incidents of youthful offenders
- Identify several standards of PREA
- Identify characteristics of inmate perpetrators and inmate victims of sexual victimization, as well as identify characteristics of sexual victimization incidents
- Define staff against offender sexual misconduct
- Identify risk factors for staff sexual misconduct
- Recognize best practices for avoiding staff sexual misconduct
- Recognize warning signs of staff sexual misconduct
- Identify consequences for staff misconduct
- Define "imbalance of power" "code of silence" and "zero tolerance" as they relate to PREA
- How to communicate effectively and professionally with youthful offenders, including lesbian, gay, bisexual, transgender, intersex or gender nonconforming inmates
- List the effects of youthful offender sexual victimization
- List best ways to handle a sexual victimization incident of a youthful offender
- Recognize myths and facts regarding PREA
- Identify best practices for reducing PREA incidents
- Understand what a zero-tolerance policy is for sexual abuse and sexual harassment
- How to fulfill responsibilities under agency sexual abuse and sexual harassment prevention, detection
- Youthful offenders' rights to be free from sexual abuse and sexual harassment
- Right of youthful offenders and employees to be free from retaliation for reporting sexual abuse and sexual harassment

Proposed Fee Schedule for
Woodbury County Juvenile Detention, IA

Pricing Structure

As a Client, Woodbury County Juvenile Detention, IA will be entitled to the following training BULK pricing, valid for 90 days from the date of executed:

- Corrections Officers/ Staff Training
  Tuition per Enrollment =$59
- Volunteer Training*
  Tuition per Enrollment =$39
- Vendor Training**
  Tuition per Enrollment =$79
- Limited Inmate Contact Vendor PREA Training**
  Tuition per Enrollment = $42

As a client, Woodbury County Juvenile Detention, IA will be entitled to the following training BULK pricing, valid for days 91-730 from the date of executed contract (based on estimate above):

- Corrections Officers/ Staff PREA Training
  Tuition per Enrollment =$79
- Volunteer PREA Training*
  Tuition per Enrollment =$59
- Vendor PREA Training **
  Tuition per Enrollment =$99
- Limited Inmate Contact Vendor PREA Training**
  Tuition per Enrollment =$42
- Bi-annual refresher of either PREA policy or PREA training
  Tuition per Enrollment=$19

* Some facilities ask their volunteers to pay for their own training, while others provide the training to them. This decision is made by the facility

**The vendor courses are generally paid for by the vendor company, rather than the facility. The facility can determine which course each specific vendor should take.

ONLINE COURSE ACCESS AND TRAINING AGREEMENT

The following agreement describes the terms and conditions on which Educorr, LLC ("Educorr") offers our education course services to Woodbury County Detention Center ("Client") as an individual, legal institution or other legal entity) whose name appears above the signature line of this Agreement below. Client hereby desires to engage the services of Educorr and Educorr has agreed to provide services to Client on the terms and conditions provided for herein. This Agreement shall govern and control the relationship and agreement between the parties.

The purpose of our courses is to provide Client's employees and agents ("Users") with a general overview of the subject matter and is usually aimed at helping Client comply with government training requirements. Educorr's courses are intended to supplement Client's training. Ensuring that Users meet training requirements is ultimately Client's responsibility. It is up to Client to provide any hands-on training (function-specific), facility or site-specific information, and any additional testing. It is also Client's responsibility to be aware of any internal policy regarding site-specific or hands-on training. Any questions, misunderstandings, or conflicts that you may have with your internal rules should be directed internally and not to Educorr.

Based upon the above premises and understandings between the Parties, the Parties further agree upon the following terms and conditions:

Section 1 – DEFINITIONS Unless the context requires otherwise, the following capitalized terms shall have the meanings set forth below:

1.1 "Educorr Services" means making the System available to Client over the Internet and any technical support and maintenance therefore as described and in accordance with this Agreement and the Services and Fees Schedule.

1.2 "Documentation" means any materials provided to Client by Educorr in connection with or relating to the System.

1.3 "Effective Date" means the latest date of execution of this Agreement by each of the Parties as set out at the bottom of this Agreement.

1.4 "Intellectual Property" means all rights to patents, copyrights, trade secrets and all other proprietary information and intellectual property rights. Proprietary information means all of the information of any description relating to System that is developed by, for, or in the possession of Educorr at any time prior to the termination of this Agreement

1.5 "Party" or "party" shall mean either Educorr or Client, and "Parties" or "parties" shall mean Educorr and Client, collectively.

1.6 "Service(s)" means any and all services provided to Client under the Agreement.

1.7 "Services and Fees Schedule" means the Services and Fees Schedule attached hereto as Appendix I.

1.8 "System" means Educorr's proprietary Online Training System, including all programming code and database schema.

1.9 "User(s)" means any person authorized by Client to access and use the System as permitted under the Agreement.

Section 2 – EDUCORR'S ONLINE TRAINING SYSTEM

2.1 Ownership. Client acknowledges that Educorr owns all right. title and interests in and to the System and Documentation, any part thereof, and all Intellectual Property therein.

2.2 License. Subject to the terms and conditions herein, during the term of the Agreement. Educorr grants to Client a limited, nontransferable, nonexclusive license to

access and use the System and Documentation solely in accordance with the terms hereof.

2.3 Scope. Client's right to access and use the System is limited by the scope of use and other restrictions set forth in this Agreement. Except as expressly permitted herein, Client shall not sell, rent, lease, distribute, license or sublicense its right to access and use the System, or otherwise use the System to provide timeshare, service bureau, application service provider or similar services to any other third party or provide access to or use of the System to any third party. Subject to payment of Ecucorr's fees pursuant to the Services and Fees Schedule, Client may use the System (a) to administer the training of employees, and agents as Users. Client shall ensure all persons that Client permits or authorizes to access the System comply with all terms and conditions herein. Client shall not permit any person to access or use the System in violation of the laws and regulations of the United States. Client shall not and shall not permit any person to copy, reverse engineer, decompile, modify or create derivative works from the System or any Documentation, or seek to interface or connect the System with any other computer software or system without prior written approval of Educorr. Client shall not modify any portions of the System that have displays of, contain references to, or otherwise identify by name the System, the ownership of the System, or Educorr. EDUCORR SHALL HAVE NO RESPONSIBILITY OR LIABILITY FOR THE PERFORMANCE OF THE SYSTEM IN THE EVENT THAT THE SYSTEM IS NOT USED IN ACCORDANCE WITH THE AGREEMENT OR ANY INSTRUCTIONS FOR USE PROVIDED BY ECUCORR OR IS MODIFIED OR INTERFACED WITH OTHER SOFTWARE OR DATA BY CLIENT OR ITS AGENTS, CONTRACTORS OR CUSTOMERS WITHOUT EDUCORR'S PRIOR WRITTEN CONSENT. Educorr shall own all modifications to the System, including all Intellectual Property therein, and Client shall execute all documents and undertake all reasonable actions as Educorr requests in order to vest ownership of such intellectual property rights in Educorr.

2.4 User Identification. Client shall further be responsible for determining and controlling registration of its Users who can and will be accessing the System for Educorr Services and ensuring that only its duly authorized Users have access to Educorr

Services. To facilitate this process, Educorr will provide Client with an access key or code, or the like, by which Client can control and allow access to the Educorr System. Client understands that a completed registration or pre-registration, whether initiated by a User's registration to the Educorr System by way of an access key or code, or by way of direction for pre-registration by Client to Educorr to register certain specific individual as Users (such as by providing a selected pre-registration list to Educorr), will immediately trigger a User charge as set out within the Services and Fee Schedule, as attached. Client shall also be responsible for the conduct of its Users with respect to the System and Educorr Services. Upon reasonable prior notice of any articulable suspected misuse of Educorr materials by Client, Client shall permit Educorr or an third party hired by Educorr for such purpose to inspect the locations and equipment from which the System is accessed or used by Client, as well as all applicable records, to confirm Client's compliance with the terms of the Agreement. Enrollment is personal to registered or pre-registered Users of Client and may not be transferred without the prior written consent of Educorr, except that registration fees paid by a company for the benefit of a User, if pre-registered by Educorr as directed by Client, are transferable to a different User at any time prior to commencement for a training course by that User upon written notice from Client to Educorr of the name of that User being removed from registration as well as the name of a new User being added in lieu thereof. In no event will transfer of registration fees be permitted after commencement for a course in any case.

2.5 Course Cancellation. Educorr reserves the right to cancel a course at any time with at least one (1) week notice prior to the start date of any such course. In such case, a full refund of any registration fees previously paid by Client for that course will be issued to Client. Client may cancel enrollment or any pre-registration of Users at any time by written notice to Educorr of Client's desire to cancel. If Client has prepaid for User registration fees as set out within the attached Services and Fee Schedule, written notice of cancellation shall be sent to Educorr at least one (1) week prior to the activation start date of a course for Client, in which case, Client will be entitled to a full refund of any registration fees previously paid by Client. If Client cancels within one (1) week of the initial start date of the course but before the actual initial start date, Client will be entitled

to a partial refund in the amount of fifty percent (50%) of any registration fees previously paid by Client. No refunds will be made if notice of cancellation is not received before the actual initial start date of the course. Upon any cancellation by Client of his or her User registration or at cancellation notice by Educorr, Client shall cease using the System with respect to the relevant Educorr course and immediately return to Educorr any Documentation or other materials previously delivered to Client or, if so instructed by Educorr, Client shall destroy such materials and certify in writing to Educorr that such materials have in fact been destroyed.

2.6 No partnership/joint venture. The Parties are independent of each other and acknowledge that no partnership or joint venture arises from this Agreement and that no fiduciary relationship is created between them. No provision of this Agreement is intended or shall be construed to provide or create any third party beneficiary rights of any kind in any third party.

Section 3 - PROFESSIONAL SERVICES.

3.1 Setup Services. Educorr will provide Client setup services subject to the terms hereof and the Services and Fees Schedule attached hereto. Client shall pay Educorr the fees set forth in the Services and Fees Schedule in accordance with the terms thereof and this Agreement.

3.2 Certificate of Completion. A Certificate of Completion from Educorr will be issued that indicates that a User has completed the requirements of the online course, which may include passing exams and spending the requisite amount of time in the course. A certificate from Educorr does not guarantee that a User possesses a minimum level of skills or knowledge regarding the subject matter. It is Client's responsibility to assess User's level of skill or knowledge and determine whether the User is qualified to perform a specific job or function.

3.3 Limit of Liability. By enrolling in this course, Client and User agree that Educorr shall not be held liable for any type of loss or damage that could be construed as arising

from this course. Educorr takes no responsibility for inappropriate use or application of information or instruction provided in this course. The information presented in this course is based on current information available at the time of production. Every reasonable attempt has been made to provide this material accurately and in an easy-to-understand format. Please understand that all the variables posed by on-the-job application of this information cannot be covered. For complete, current, technical, and regulatory information, we encourage you to always have a reliable, accurate, up-to-date source available. These courses are designed to provide reasonably accurate and authoritative information regarding the subject matter covered. Educorr Services are sold with the understanding that Educorr is not engaged in rendering legal, accounting, or other professional services. If legal or other expert assistance is required, the services of a competent professional should be sought.

3.4 Fees and Costs. As set forth in Appendix I. the Services and Fees Schedule, Educorr shall invoice Client for all fees associated with the Services provided under the Agreement. In the event that Educorr expects to or by Client request will incur other costs in connection with providing the Services to Client, including document reproduction costs, travel expenses and costs of media, the Parties will separately agree in writing to cover such expenses when incurred. Invoices shall be due and payable by Client within thirty (30) days of the invoice date.

3.5 Taxes. Client shall pay all present or future sales, excise, import, use, value-added or other similar taxes or duties (not including taxes or duties on the income of Educorr) levied or based on payments made to Educorr pursuant to this Agreement.

3.6 Unpaid Amounts. Client shall pay Educorr a late charge of one and one-half percent (1½%) per month or the maximum rate allowed by law, whichever is greater, on all amounts not paid to Educorr by Client when due. Educorr shall have the right to suspend the Services without further notice in the event Client fails to pay any amount when due. In the event Educorr initiates collection activities in connection with any past due amount owed by Client hereunder, Client agrees to pay all of Educorr's costs and expenses incurred in connection therewith. Client shall pay to Educorr all amounts owed by Client

to Educorr under the Agreement and shall not set-off, counterclaim, exercise any right of recoupment or otherwise withhold any other amount owed to Educorr on account of any obligation owed by Educorr to Client.

Section 4 - TERM AND TERMINATION.

4.1 Term. This Agreement shall begin on the Effective Date and remain in full force and effect for two years, with 3 annual optional renewals unless and until terminated in accordance with Section 4 hereof.

4.2 Termination by Client. Client may terminate this Agreement at any time with or without cause effective thirty (30) days after delivery of written notice of termination to Educorr.

4.3 Termination by Educorr. Educorr may terminate the Agreement at any time with or without cause effective thirty (30) days after delivery of written notice of termination to Client; provided, however, that in the event Educorr terminates the Agreement without cause and Client has prepaid Educorr's services fees, Educorr shall, at Educorr's option, either (i) refund to Client the unused amount of such prepaid fees on a prorated basis or (ii) extend the effective date of termination of the Agreement until the prepaid services have been provided to the Client. Educorr may also terminate the Agreement effective immediately upon delivery of written notice of termination to Client in the event that Client fails to pay any amount when due within five (5) days following Educorr's delivery of written notice to Client of such nonpayment.

4.4 Effect of Termination. Termination or expiration of the Agreement shall not limit either party from pursuing other remedies available to it, including injunctive relief, nor shall such termination or expiration relieve Client of the obligation to pay all fees that have accrued or are otherwise owed by Client under this Agreement. The parties' rights and obligations under Sections 3, 5, and 6 shall survive the expiration or termination of the Agreement.

Section 5 - CONFIDENTIALITY.

5.1 Confidentiality of Agreement and System. Client shall maintain the strict confidentiality of the System (including the content and design of the System and all software code), the Documentation, all Educorr trade secrets, and all information regarding any proprietary information, method or process of Educorr (together, the "Restricted Educorr Materials"). Client shall not use, sell, transfer, publish, disclose, display or otherwise make the Restricted Educorr Materials available to others, except as expressly permitted under the Agreement or required by judicial process or law.

5.2 Other Confidential Information. The parties acknowledge that during the term of the Agreement a party may disclose ("Discloser") to the other certain valuable and confidential information regarding the Discloser's financial condition, suppliers, customers, business plans, data and other information not generally known to the public which provides a competitive advantage to the Discloser, including the terms of the Agreement ("Confidential Information"). The party ("Recipient") that receives Confidential Information of the Discloser shall not disclose or divulge the Confidential Information to third parties, other than consultants, agents or independent contractors of the Recipient that are bound by confidentiality obligations comparable to those set forth herein, and shall limit use of the Confidential Information to use necessary in the performance of the Recipient's obligations under the Agreement. The obligation to maintain the confidentiality of Confidential Information hereunder, other than that portion of Confidential Information that constitutes trade secrets under applicable law, shall continue in full force and effect during the term of the Agreement and for a period of three (3) years after termination of the Agreement; however, the Recipient shall maintain the confidentiality of that portion of Confidential Information that constitutes trade secrets under applicable law for so long as such Confidential Information constitutes trade secrets under applicable law. Notwithstanding the foregoing, the Recipient shall not be required to maintain the confidentiality of information that: (i) the Recipient can demonstrate with documentary evidence was in the Recipient's possession prior to disclosure by the Discloser, so long as such information is not otherwise subject to an obligation of confidentiality; (ii) the Recipient can demonstrate with documentary

evidence became generally available to the public other than as a result of a disclosure by the Recipient: (iii) the Recipient can demonstrate with documentary evidence became available to it on a non-confidential basis from a source other than the Discloser, or (iv) as required by judicial process or law. If the Recipient is required to disclose the Discloser's Confidential Information by a lawful court order, subpoena, or similar legal request, the Recipient shall (if legally permitted) promptly notify the Discloser in writing of such requirement to permit the Discloser to seek an appropriate protective order.

Section 6 - WARRANTIES, DISCLAIMER AND LIMITATION OF LIABILITY.

6.1 System. Educorr represents and warrants to Client that Educorr has the requisite power and authority to enter into and perform the Agreement.

6.2 Warranty Disclaimer. OTHER THAN THE REPRESENTATION AND WARRANTY EXPRESSLY SET FORTH IN SECTION 6.1, THE SYSTEM AND SERVICES ARE PROVIDED AS-IS, AND EDUCORR MAKES NO WARRANTIES, EXPRESS OR IMPLIED, REGARDING THE SYSTEM AND SERVICES AND EXPRESSLY DISCLAIMS ALL OTHER WARRANTIES, INCLUDING ALL WARRANTIES OF MERCHANTABILITY, FITNESS FOR A PARTICULAR PURPOSE AND NONINFRINGEMENT, AND ANY WARRANTIES ARISING FROM COURSE OF PERFORMANCE OR DEALING.

6.3 Limitation of Liability. IN NO EVENT SHALL EDUCORR BE LIABLE TO THIRD PARTIES FOR ANY INDIRECT, EXEMPLARY, INCIDENTAL, SPECIAL, PUNITIVE OR CONSEQUENTIAL DAMAGES (INCLUDING DAMAGE TO BUSINESS REPUTATION, LOST BUSINESS OR LOST PROFITS) HOWEVER CAUSED, WHETHER BY NEGLIGENCE OR OTHERWISE, ARISING FROM OR RELATING TO THE AGREEMENT OR ANY BREACH HEREOF, EVEN IF EDUCORR HAS BEEN ADVISED OF THE POSSIBILITY OR LIKELIHOOD OF SUCH DAMAGES. ECUCORR'S LIABILITY TO CLIENT UNDER ANY THEORY OR CIRCUMSTANCE SHALL NOT EXCEED THE AMOUNT ACTUALLY PAID

BY CLIENT TO EDUCORR UNDER THE AGREEMENT FOR THE APPLICABLE SERVICE TO WHICH THE CLAIM RELATES FOR THE TWELVE (12) MONTHS PRECEDING THE CLAIM.

Section 7 - GENERAL.

7.1 Relationship of Parties. The relationship of the parties established by the Agreement is solely that of independent contractors. Neither party nor its agents or employees is the representative of the other for any purpose, and neither has power or authority to act as agent of, or to represent, act for, bind, or otherwise create or assume, any obligation on behalf of the other.

7.2 Export Administration. Client agrees to comply fully with all relevant export laws and regulations of the United States ("Export Laws") to assure that the System is not (1) accessed or used, directly or indirectly, in violation of Export Laws; or (2) used in any manner or for any purposes prohibited by the Export Laws.

7.3 Governing Law. The Agreement shall be governed by, construed and enforced under the laws of the State of Iowa.

7.4 Dispute Resolution. Any dispute between the parties hereunder shall be resolved as specified herein:

(a) Upon the delivery of a written request by either party to the other party (the "Notice"), a dispute shall be submitted to officers designated by each party at the vice president level or higher ("Designated Officers") for their review and resolution within forty-five (45) days after the receipt of the Notice. The Designated Officers shall discuss the dispute and negotiate in good faith in an effort to resolve the dispute without the necessity of any formal proceeding relating thereto. The specific format and process for such negotiations will be as mutually agreed to by the Designated Officers.

(b) If the dispute is not resolved by the Designated Officers within forty-five (45) days after the receipt of the Notice, either party may seek resolution of the dispute in court.

Each of the parties hereto hereby agrees that all actions, suits or other proceedings arising out of or relating in any way to the Agreement shall be brought only in state or federal courts in the State of Iowa.

7.5 Assignment. Client shall not, directly or indirectly, by assignment or change of control or otherwise, assign or transfer the Agreement or any of its rights or obligations hereunder without the prior written consent of Educorr. The Agreement shall be binding upon and inure to the benefit of the parties hereto and (i) with respect to Client, its permitted successors and assigns, and (ii) with respect to Educorr, its successors and assigns.

7.6 Notices. Any notice, consent or other communication in connection with the Agreement shall be in writing and may be delivered in person, or by certified mail (return receipt requested) to the parties at the addresses set forth at the bottom of this Agreement. Unless otherwise stated, notice shall be effective upon receipt. Each party may change its address for notification purposes by giving the other party written notice of the new address and the date upon which it shall become effective.

7.7 Publicity. Educorr may prepare, circulate and publish press releases concerning the existence of the Agreement and may reference Client and the Agreement in its advertising, sales promotions, trade shows, or other marketing materials with written approval by Client.

7.8 Force Majeure. Neither party shall be liable to the other by reason of any failure of performance hereunder (except failure to pay any amount when due) if such failure arises out of causes beyond such party's reasonable control. Any party experiencing such an event shall give as prompt notice as possible to the other party under the circumstances.

7.9 Waiver. No delay or omission by either party to exercise any right or power it has under the Agreement shall impair or be construed as a waiver of such right or power. A waiver by either party of any covenant or breach shall not be construed to be a waiver of any succeeding breach or of any other covenant. All waivers must be in writing and signed by the party waiving its rights.

7.10 Residual Knowledge. Nothing herein shall be construed to prevent or in any way limit Educorr from using general knowledge, skill and expertise acquired in the performance of the Agreement in any current or subsequent engagement or business. Client shall have no interest in such engagements or business.

7.11 Subcontractors. Educorr shall have the right to subcontract the performance of its obligations hereunder based upon notice and prior approval of Client; however, Educorr shall remain ultimately responsible for the performance of its obligations hereunder notwithstanding any subcontract.

7.12 Rules of Construction. Interpretation of the Agreement shall be governed by the following rules of construction: (a) words in the singular shall be held to include the plural and vice versa and words of one gender shall be held to include the other gender as the context requires, (b) references to the terms Section, Attachment, and Services and Fees Schedule are references to the Sections of these General Terms and Conditions and the Attachments, and Services and Fees Schedule comprising this Agreement unless otherwise specified, (c) the word "including" and words of similar import shall mean "including, without limitation," (d) provisions shall apply, when appropriate, to successive events and transactions, (e) the headings contained herein are for reference purposes only and shall not affect in any way the meaning or interpretation of the Agreement and (f) the Agreement shall be construed without regard to any presumption or rule requiring construction or interpretation against the party drafting or causing any instrument to be drafted. In the event of any conflict between the General Terms and Conditions and any Attachment, the General Terms and Conditions shall prevail unless the Attachment containing such conflicting provision specifically references the provision of the General Terms and Conditions to be superseded and sets forth the parties' intent to supersede such provision of the General Terms and Conditions with the conflicting provision of the Attachment, and such Attachment is signed by both parties.

7.13 Entire Agreement. These General Terms and Conditions and all Attachments, each of which is hereby incorporated into this Agreement by reference, constitute the entire agreement between the parties with respect to the subject matter hereof, and all prior

representations, understandings or agreements between the parties relating to such subject matter are merged herewith. No modification of the Agreement shall be valid unless in writing and signed by any authorized representative of the party against which such modification is sought to be enforced.

7.14 Counterparts. The Agreement (including any Attachment) may be executed in one or more counterparts, and by the different parties to each such agreement in separate counterparts, each of which when executed shall be deemed to be an original but all of which taken together shall constitute one and the same agreement.

EDUCORR, LLC,
3121 Saint Croix Trail
Afton, MN 55001

CLIENT: _____
Address: _____
_____

By:_____

Title:_____

Date:_____

By:_____

Title:_____

Date:_____

81788

Appendix I

Services and Fee Schedule

Pricing Structure
As a Client, Woodbury County Juvenile Detention, IA will be entitled to the following training BULK pricing, valid for 90 days from the date of executed:

- Corrections Officers/ Staff Training
  Tuition per Enrollment =$59
- Volunteer Training*
  Tuition per Enrollment =$39
- Vendor Training**
  Tuition per Enrollment =$79
- Limited Inmate Contact Vendor PREA Training**
  Tuition per Enrollment = $42

As a client, Woodbury County Juvenile Detention, IA will be entitled to the following training BULK pricing, valid for days 91-730 from the date of executed contract (based on estimate above):

- Corrections Officers/ Staff PREA Training
  Tuition per Enrollment =$79
- Volunteer PREA Training*
  Tuition per Enrollment =$59
- Vendor PREA Training **
  Tuition per Enrollment =$99
- Limited Inmate Contact Vendor PREA Training**
  Tuition per Enrollment =$42
- Bi-annual refresher of either PREA policy or PREA training
  Tuition per Enrollment=$19

* Some facilities ask their volunteers to pay for their own training, while others provide the training to them. This decision is made by the facility
**The vendor courses are generally paid for by the vendor company, rather than the facility. The facility can determine which course each specific vendor should take.

If the facility has a site specific PREA policy and procedure that they request to have incorporated as part of their Educorr course work, and have the record of each participant's acknowledgement of the policy stored electronically, there is a one time set up fee of $99.

See https://educorr.com/MarketingMaterial/ViewMarketingSlides.aspx for specifics on choosing the right Users to associate with each course offered.

WOODBURY COUNTY BOARD OF SUPERVISORS AGENDA ITEM(S) REQ
Approved on March 3, 2015 by the Board of Supervisors

#10

Date Submitted: 04/27/2015

Weekly Agenda Date: 05/05/2015

Department Head/ Citizen: Steve Hofmeyer - Auditor's Office

Subject: Copier Lease

ACTION REQUIRED:

- ☐ Approve Ordinance
- ☐ Approve Resolution
- ☑ Approve Motion
- ☐ Give Direction
- ☐ Other Informational
- ☐ Attachments

Wording for Agenda Item: Asking for the Board of Supervisors to approve lease for copier from Office Elements.

Executive Summary:

Background: We acquired 3 bids for a new copier, Century Business Products - $8,729, Office Systems Co. - $9,716, and Office Elements - $7,268. These are the total costs over a 5 year lease for their copiers.

Financial Impact: $121.14 a month for 5 years totaling $7,268.

Recommendation: To go with the Office Elements bid.

Action Required: Approve Office Elements Lease for their copier.

WOODBURY COUNTY BOARD OF SUPERVISORS AGENDA ITEM(S) RE

#11

Date: 04.23.2015

Weekly Agenda Date: 05.05.2015

DEPARTMENT HEAD / CITIZEN: ELECTED OFFICIAL – SHERIFF DAVE DREW

SUBJECT: **WOODBURY COUNTY PROCLAMATION RECOGNIZING NATIONAL LAW ENFORCEMENT MEMORIAL WEEK**

ACTION REQUIRED:

Approve Ordinance ☐	Approve Resolution ☐	Approve Motion ☐
Give Direction ☐	Other: Informational ☒	Attachments ☐

WORDING FOR AGENDA ITEM: WOODBURY COUNTY, IOWA PROCLAMATION RECOGNIZING NATIONAL LAW ENFORCEMENT MEMORIAL WEEK

EXECUTIVE SUMMARY: N/A

BACKGROUND: In 1962, President John F. Kennedy signed a proclamation which designated May 15th as Peace Officers Memorial Day and the week in which that date falls as Police Week. Currently, tens of thousands of law enforcement officers from around the world converge on Washington, DC to participate in a number of planned events which honor those that have paid the ultimate sacrifice.

The Memorial Service began in 1982 as a gathering in Senate Park of approximately 120 survivors and supporters of law enforcement. Decades later, the event, more commonly known as National Police Week, has grown to a series of events which attracts thousands of survivors and law enforcement officers to our Nation's Capital each year.

The National Peace Officers' Memorial Service is one in a series of events which includes the Candlelight Vigil, which is sponsored by the National Law Enforcement Officers Memorial Fund (NLEOMF) and seminars sponsored by Concerns of Police Survivors (C.O.P.S.)

National Police Week draws in between 25,000 to 40,000 attendees. The attendees come from departments throughout the United States as well as from agencies throughout the world.

Woodbury County honors its fallen this year during a service on Monday, May 11th at noon. Local law enforcement officers that gave the ultimate sacrifice are memorialized on the Public Safety Memorial that was erected between the Woodbury County Courthouse and City Hall. The service gives the families of the fallen, the agencies they worked for, and the public the opportunity to share memories, and always be reminded of the sacrifice that was made.

FINANCIAL IMPACT: N/A

RECOMMENDATION: N/A

ACTION REQUIRED: APPROVAL OF THE PROCLAMATION

Approved by Board of Supervisors March 3, 2015.

WOODBURY COUNTY POLICE WEEK PROCLAMATION
MAY 10-16, 2015

To recognize National Police Week 2015 and to honor the service and sacrifice of those law enforcement officers killed in the line of duty while protecting our communities and safeguarding our democracy.

WHEREAS, there are approximately 900,000 law enforcement officers serving in communities across the United States, including the dedicated members of the Woodbury County Sheriff's Office;

WHEREAS, nearly 60,000 assaults against law enforcement officers are reported each year, resulting in approximately 16,000 injuries;

WHEREAS, since the first recorded death in 1791, more than 20,000 law enforcement officers in the United States have made the ultimate sacrifice and been killed in the line of duty, including eleven law enforcement members in Woodbury County, IA; to wit; Special Agent Kevin J. Kramer, 1996; Capt. Phillip A. Heimbecker, 1993; Cpl. Jon E. Hermann, 1993; Patrolman Warren T. Hodgins, 1973; Capt. Joseph P. Davidchik 1968; Matron Mary Eileen Heilman, 1959; County Attorney James R. Brodie, 1959; Chief Deputy Jimmie Biggs, 1959; Patrolman Sylvan E. Dykstra, 1953; Deputy Lewis R. Jones, 1921; Chief Detective James G. Britton, 1919;

WHEREAS, the names of these dedicated public servants are engraved on the Law Enforcement Officer's Memorial, in Sioux City, IA.

WHEREAS, more than two-hundred, new names of fallen heroes are being added to the National Law Enforcement Officers Memorial this spring, including 117 officers killed in 2014 and 156 officers killed in previous years;

WHEREAS, the service and sacrifice of all officers killed in the line of duty will be honored during the National Law Enforcement Officers Memorial Fund's 27th Annual Candlelight Vigil, on the evening of May 13, 2015, in Washington D.C.;

WHEREAS, the Candlelight Vigil is part of National Police Week, which takes place this year on May 10-16;

WHEREAS, May 15 is designated as Peace Officers Memorial Day, in honor of all fallen officers and their families and U.S. flags should be flown at half-staff;

THEREFORE, BE IT RESOLVED that the Woodbury County Board of Supervisors, formally designates May 10-16, 2015, as Police Week in Woodbury County, IA, and publicly salutes the service of law enforcement officers in our community and in communities across the nation.

#12

WOODBURY COUNTY BOARD OF SUPERVISORS AGENDA ITEM(S) RE

Date: __April 29, 2015_____

Weekly Agenda Date: _May 5, 2015__

DEPARTMENT HEAD / CITIZEN: _____Supervisor Jeremy Taylor_____

SUBJECT: **Commission of Veterans Affairs**

ACTION REQUIRED:

Approve Ordinance ☐	Approve Resolution ☐	Approve Motion ☐
Give Direction ☐	Other: Informational ☒	Attachments ☐

WORDING FOR AGENDA ITEM: Information on County Commission of Veterans Affairs

EXECUTIVE SUMMARY: The Woodbury County Commission of Veterans Affairs can be increased from 3 to 5, a proposal that is supported by the current Commission and the Executive Director.

BACKGROUND: One Commission member is retiring and a vacancy is needed in order to fill in that position. Increasing the Commission from 3 to 5 would help support the ease of having a quorum, provide increased diversity on the Board, and bring in broader representation.

FINANCIAL IMPACT: Up to $800 annually.

RECOMMENDATION: The Board consider the improvement to the Commission and the veterans of Woodbury County.

ACTION REQUIRED: Motion to follow next week.

#13

WOODBURY COUNTY BOARD OF SUPERVISORS AGENDA ITEM(S) REQU

Date: May 1, 2015

Weekly Agenda Date: May 5, 2015

DEPARTMENT HEAD / CITIZEN: Mark Monson

SUBJECT: Purchasing TV and Mobile Stand for Board of Supervisors Meeting Room

ACTION REQUIRED:

Approve Ordinance ☐	Approve Resolution ☐	Approve Motion ☒
Give Direction ☐	Other: Informational ☐	Attachments ☐

WORDING FOR AGENDA ITEM: Discussion and action on purchase of monitors for Board of Supervisors meeting room.

EXECUTIVE SUMMARY:

BACKGROUND:

FINANCIAL IMPACT:

RECOMMENDATION:

ACTION REQUIRED:

Approved by Board of Supervisors March 3, 2015.

Dennis Butler - BOS TV and Mobile Stand

From: John Malloy
To: Butler, Dennis
Date: 4/30/2015 5:45 PM
Subject: BOS TV and Mobile Stand

Dennis, (IF WE PURCHASE TWO SETS OF TVs/STANDS, THEN WE WOULD NEED TO FIGURE OUT HOW TO DISPLAY BOTH UNITS. KINGSBURY WOULD NEED TO BE ENGAGED - POSSIBLY AS SIMPLE AS A SPLITTER.)

(Following is my draft verbiage. Feel free to reword.)

The TV Monitor being proposed for the BOS chambers is the Vizio D650i-B2 65" LED 120Hz 1080p WiFi Smart HDTV. As the model description suggests, the unit measures 65" diagonally, is WiFi enabled and is currently priced at $679.99 or slightly over $10 a diagonal inch. This TV is a recertified product and carries a 90 day warranty. Two, three and four warranties can be purchased for $119.95, $139.95 and $179.95 respectively. In conjunction with the TV, a mobile cart to mount the TV is being recommended for $159.99.

John Malloy

WOODBURY COUNTY BOARD OF SUPERVISORS AGENDA ITEM(S) RE

#14a

Date: April 30, 2015

Weekly Agenda Date: May 5, 2015

DEPARTMENT HEAD / CITIZEN: Mark J. Nahra P.E. Secondary Roads Dept Head

SUBJECT: **Consideration of Paving Policy Revisions**

ACTION REQUIRED:

Approve Ordinance ☐	Approve Resolution ☐	Approve Motion ☒
Give Direction ☐	Other: Informational ☐	Attachments ☒

Consideration X

WORDING FOR AGENDA ITEM: Consideration of the revised paving policy.

EXECUTIVE SUMMARY: A subcommittee consisting of Planning and Zoning and Secondary Road staff and county supervisors reviewed the county's policy for paving roads. The policy was updated to conform to zoning and subdivision ordinance provisions. The policy also reviewed and updated the percentage of landowner participation in the cost of paving improvements.

BACKGROUND: Work in the county ROW requires a permit from the Board of Supervisors per section 318.8 of the Code of Iowa.

FINANCIAL IMPACT: Potential cost savings for county on future requests for paving roads in conjunction with subdivision development.

RECOMMENDATION: Recommend approval of revised policy.

ACTION REQUIRED: Motion to approve county paving policy.

Approved by Board of Supervisors March 3, 2015.

Woodbury County Secondary Roads Department

759 E. Frontage Road • Moville, Iowa 51039
Telephone (712) 279-6484 • (712) 873-3215 • Fax (712) 873-3235

COUNTY ENGINEER
Mark J. Nahra, P.E.
mnahra@sioux-city.org

ASSISTANT TO THE COUNTY ENGINEER
Benjamin T. Kusler, E.I.T.
bkusler@sioux-city.org

SECRETARY
Tish Brice
tbrice@sioux-city.org

PPM #5, 2015

WOODBURY COUNTY SECONDARY ROAD DEPARTMENT
POLICY AND PROCEDURE MEMORANDUM

SUBJECT: PAVING POLICY

1.0 Purpose

Subdivision development in the rural area creates additional traffic on gravel surfaced roads which were designed primarily for rural farm access. Fugitive dust and rough roads draw frequent complaints from residents who move to the rural area and construct new homes. The county receives requests for paving the roads to meet the new traffic demand.

Property taxes generated by rural residential development rarely pay back the cost of grading and paving a road to meet the new demand. As such, the county is developing this policy to gain participation in road improvement costs from the subdivider or those who purchase rural residential property. This policy states the level of county participation in road improvements and sets a framework for developing paving agreements in the rural area.

The County has not realized total reimbursement of roadway improvement costs from subdivision developers or land owners. Financial, human and other resources are limited and therefore the County desires to establish financial resource guidelines for future pavement extensions to, adjacent and through rural subdivisions.

For new subdivisions the terms of roadway improvement cost sharing within this Paving Policy shall be implemented by the use of Agreements to Impose Covenants; more commonly known as Paving Agreements. Specifically, as a condition of a subdivision's final plat approval, that the Board of Supervisors will require the timely recording of any Paving Agreement.

Samples of Paving Agreement language meeting this Paving Policy is attached and marked Exhibit A and Exhibit B.

Financial Resources

1.1 Special Assessment District

Chapter 331, Section 485, Code of Iowa, establishes the procedures for "County Special Assessment Districts". This process would be the most logical form of cost reimbursement to the County. Section 331.486 indicates that "a county may construct and assess the cost of public improvements within a district in the same manner as a city may proceed under Chapter 384..." Sections 384.37 – 384.79 describes the procedures cities are required to follow for special assessment districts. District boundaries are established by the Board of Supervisors as per Section 331.485.

1.2 Tax Increment Financing

Chapter 403, Code of Iowa, is the "Urban Renewal Law". Section 403.22 describes public improvements related to housing and residential development and low income assistance requirements. The County has use of the funds, but must designate the Low to Moderate Income (LMI) portion to go towards LMI benefit.

1.3 Real Estate Improvements District

Chapter 358C, Code of Iowa, establishes the procedures for creation of a Real Estate Improvement District. The general assembly created this program to assist developers and communities in increasing the availability of housing in Iowa communities. Section 358C.4 authorizes the district to acquire, construct, reconstruct, install, maintain, and repair any of the public improvements listed in this section. Section 358C.4.2.m identifies "Public roads, streets, and alleys" as eligible public improvements.

1.4 General Obligation Bonds

Section 331.441-331.460 describes the procedures for issuance of General Obligation Bonds for "Essential County Purpose". Section 331.441.2.b.2 identifies "Bridges on highway or parts of highways which are located along the corporate limits of cities and are partly within and partly without the limits and are in whole or in part secondary roads".

2.0 Participation Guidelines

2.1 Woodbury County will begin to consider paving extensions and County participation when the Average Daily Traffic (ADT) falls within the range of 250 to 500 vehicles per day.

2.2 The County will participate up to 20% of the construction costs for paving extension to, adjacent or through a new subdivision or through an existing development. Project development costs will be borne solely by the developer, subdivider or land owners requesting the road upgrade. Grading costs to prepare the roadway for paving will be included in the cost of the project to be shared by the parties requesting the paving improvement.

2.3 Woodbury County will use six (6) vehicles per day as a planning number to estimate the number of trips generated by a single family residence.

2.4 Bridges, box culverts and other drainage structures will be negotiated individually as proposed projects are presented to the County.

2.5 Payment of the cost of the project will be made from funds of the County that may be legally used for such purpose at the sole discretion of the Board of Supervisors.

2.6 The Woodbury County Engineer may assist the developer with the development of opinions of cost related to the proposed pavement extension. This shall be considered as a planning tool only. Actual final construction costs will determine the necessary financial commitment of the developer, subdivider or land owner.

2.7 Design guidelines and standards will be established by the Woodbury County Engineer.

2.8 Schedules will be determined by the Woodbury County Engineer.

2.9 These guidelines are not intended to be all inclusive. The Board of Supervisors reserves the right to modify these guidelines as necessary to accommodate the social and economic needs of the project.

3.0 Summary

Woodbury County desires that these guidelines shall be made in accordance with a comprehensive plan and designed to facilitate the adequate provision of transportation, to encourage efficient urban development patterns and to lessen congestion in the street or highway.

Such regulations shall be made with reasonable consideration, among other things, as to the character of the area of the district and the peculiar suitability of such are for particular uses, and with a view to conserving the value of buildings and encouraging the most appropriate use of land throughout Woodbury County.

This Paving Policy approved this _____day of _____, 2015 for Woodbury County, State of Iowa,

SO APPROVED this _____day of _____, 2015.

WOODBURY COUNTY BOARD OF SUPERVISORS

ATTEST:

_____
Mark A. Monson, Chairman

_____
Patrick F. Gill, County Auditor
Recorder

_____
Larry D. Clausen, Member

_____
Jaclyn Smith, Member

_____
Matthew A. Ung, Member

_____
Jeremy J. Taylor, Member

WOODBURY COUNTY BOARD OF SUPERVISORS AGENDA ITEM(S) RE

#14b

Date: April 30, 2015

Weekly Agenda Date: May 5, 2015

DEPARTMENT HEAD / CITIZEN: Mark J. Nahra P.E. Secondary Roads Dept Head

SUBJECT: **Consideration of Certificate of Completion of Contract Work for the Secondary Road Department.**

ACTION REQUIRED:

Approve Ordinance ☐ Approve Resolution ☐ Approve Motion ☒

Give Direction ☐ Other: Informational ☐ Attachments ☒

Consideration X

WORDING FOR AGENDA ITEM: Consideration of certificate of completion for bridge replacement project L-B(K199)—73-97.

EXECUTIVE SUMMARY: The county board of supervisors let bridge replacement project L-B(K199)—73-97 on June 3, 2014 to contract with Christensen Brothers Construction. The project work is now complete.

BACKGROUND: The project work is complete in compliance with plans and specifications.

FINANCIAL IMPACT: This project was part of the FY 2015 Construction program.

RECOMMENDATION: Recommend approval of certificate of completion.

ACTION REQUIRED: Motion to approve certificate of completion for Christensen Brothers Construction and direct chair to sign said certificate.

Approved by Board of Supervisors March 3, 2015.

CERTIFICATION AS TO COMPLETION OF WORK
AND FINAL ACCEPTANCE BY THE BOARD OF SUPERVISORS
WOODBURY COUNTY, IOWA

PROJECT NO. L-B(K199)—73-97

This is certify that work covered by contract entered into with

Christensen Brothers Construction

of Cherokee, Iowa under the date of June 03, 2014

Bridge replacement on Michigan Ave. in
Section 34-88-43

Contract Amount: **$510,724.50**

in Woodbury County was completed in accordance with the plans and specifications therefore, and in a satisfactory manner on **April 20, 2015**

May 04, 2014 By _____
Date County Engineer

Approved: Board of Supervisors
Woodbury County, Iowa

May 04, 2015 By _____
Date Chairperson

#14C

WOODBURY COUNTY BOARD OF SUPERVISORS AGENDA ITEM(S) REQ

Date: April 30, 2015

Weekly Agenda Date: May 5, 2015

DEPARTMENT HEAD / CITIZEN: Mark J. Nahra P.E. Secondary Roads Dept Head

SUBJECT: **Consideration of award of quotations for FEMA repairs**

ACTION REQUIRED:

Approve Ordinance ☐	Approve Resolution ☐	Approve Motion ☒
Give Direction ☐	Other: Informational ☐	Attachments ☒

Consideration X

WORDING FOR AGENDA ITEM: Consideration of award of quotations for repair to bridge C-160, the Haskell Avenue bridge over McElhaney Creek north of Moville

EXECUTIVE SUMMARY: This bridge was damaged during flash flooding following a storm event that started on June 15, 2014. The project was awarded repair funds from FEMA to allow the county to make repairs to the bridge. While the bridge is open to traffic, it is under load restrictions due to the damage incurred during the flash flood event. The project will repair the damaged bridge pier and allow the county to remove load restrictions on the bridge.

BACKGROUND: For projects with an engineer's estimate of less than $50,000 the county may obtain quotes for the work under the provisions of Sections 309.40 and 309.41 of the Code of Iowa which outlines optional advertisement and letting procedures. The department solicited quotations from six bridge building companies and received two quotes in response.

FINANCIAL IMPACT: This project is FEMA fund eligible. This project is receiving 75% of project cost from FEMA and 10% from Iowa Homeland Security disaster response funds. The balance is paid by the county.

RECOMMENDATION: Recommend acceptance of the low quote from Dixon Construction Company and accept the revised project completion date of October 30, 2015.

ACTION REQUIRED: Motion to accept and award the quote from Dixon Construction Company for the repair of Bridge C-160.

Approved by Board of Supervisors March 3, 2015.

Bidders List
FEMA SITE 12

Graves Construction
P.O. Box 1417
Spencer, Iowa 51301

Christensen Brothers Inc
P.O. Box 478
Cherokee, Iowa 51012

Godbersen Smith
5784 Highway 175
Ida Grove, Iowa 51445

Kooiker Inc
507 Lee Drive
Le Mars, Iowa 51031

Nelson & Rock Contracting, INC
23565 HWY K45
Onawa, IA 51040-0000

Dixon Construction
409 Driftwood
Correctionville, Iowa

Woodbury County Secondary Roads Department

759 E. Frontage Road • Moville, Iowa 51039
Telephone (712) 279-6484 • (712) 873-3215 • Fax (712) 873-3235

COUNTY ENGINEER
Mark J. Nahra, P.E.
mnahra@sioux-city.org

ASSISTANT TO THE COUNTY ENGINEER
Benjamin T. Kusler, E.I.T.
bkusler@sioux-city.org

SECRETARY
Tish Brice
tbrice@sioux-city.org

Structure: FHWA# 355055
Quote for Bridge Repair
Bridge Located in Section 29 Arlington Township
On Haskell Ave. over McElhaney Creek FEMA SITE 12

	Quantity	Quote	Total
Furnish and drive four (4) 60' HP 12" x 53"	1	Lump Sum @ $ 35,100.00 Lump Sum =	35,100.00
Furnish and Place Safety Fence	2	Each @ $ 350.00 Each =	700.00

Total Quote: 35,800.00

The Lump Sum cost includes: Mobilization, equipment, labor, four (4) new 60' HP 12X 53 steel pile, materials to drive four steel piling and weld onto existing bridge as illustrated on attached diagram. Signing shall be done for the road closure by Woodbury County and the safety fence shall be supplied by the contractor as quoted. The steel piling and welding shall be as per Section 4167 of the I.D.O.T. specifications. The hammer and driving method used for driving piles shall be per section 2501.03. The successful contractor shall supply certification of insurance listing Woodbury County as additionally insured. **ALL WORK SHALL BE COMPLETED BY ~~JULY 13, 2015~~** October 30, 2015. QUOTES ARE DUE BY 4:00 PM April 29, 2015. Quotes shall be mailed to the County Engineer's Office at 759 East Frontage Road Moville, Iowa 51039 and clearly marked in the lower left hand corner "REPAIR QUOTE BRIDGE".

Contractor: Dixon Construction Co.

Address: 419 Dahlward St.
Correctionville, IA 51016

Signature: David L. Dixon Date: 4/29/15

Woodbury County Secondary Roads Department

759 E. Frontage Road • Moville, Iowa 51039
Telephone (712) 279-6484 • (712) 873-3215 • Fax (712) 873-3235

COUNTY ENGINEER
Mark J. Nahra, P.E.
mnahra@sioux-city.org

ASSISTANT TO THE COUNTY ENGINEER
Benjamin T. Kusler, E.I.T.
bkusler@sioux-city.org

SECRETARY
Tish Brice
tbrice@sioux-city.org

Structure: FHWA# 355055
Quote for Bridge Repair
Bridge Located in Section 29 Arlington Township
On Haskell Ave. over McElhaney Creek FEMA SITE 12

	Quantity	Quote	Total
Furnish and drive four (4) 60' HP 12" x 53"	1	Lump Sum @ $ 44,800.00 Lump Sum	= 44,800.00
Furnish and Place Safety Fence	2	Each @ $ 500.00 Each	= 1,000.00

Total Quote: 45,800.00

The Lump Sum cost includes: Mobilization, equipment, labor, four (4) new 60' HP 12X 53 steel pile, materials to drive four steel piling and weld onto existing bridge as illustrated on attached diagram. Signing shall be done for the road closure by Woodbury County and the safety fence shall be supplied by the contractor as quoted. The steel piling and welding shall be as per Section 4167 of the I.D.O.T. specifications. The hammer and driving method used for driving piles shall be per section 2501.03. The successful contractor shall supply certification of insurance listing Woodbury County as additionally insured. **ALL WORK SHALL BE COMPLETED BY JULY 13, 2015**. QUOTES ARE DUE BY 4:00 PM April 29, 2015. Quotes shall be mailed to the County Engineer's Office at 759 East Frontage Road Moville, Iowa 51039 and clearly marked in the lower left hand corner "REPAIR QUOTE BRIDGE".

Contractor: NELSON & ROCK CONTRACTING, INC.

Address: 23565 HWY K45
ONAWA, IA 51040

Signature: Wayne L. Rock VP Date: 4-29-15

#14d

WOODBURY COUNTY BOARD OF SUPERVISORS AGENDA ITEM(S) R

Date: April 30, 2015

Weekly Agenda Date: May 5, 2015

DEPARTMENT HEAD / CITIZEN: Mark J. Nahra P.E. Secondary Roads Dept Head

SUBJECT: **Review of Secondary Road Departmental policies for Sign Installation, Inspection, and Maintenance and Secondary Road Driveways and Entrances**

ACTION REQUIRED:

Approve Ordinance ☐	Approve Resolution ☐	Approve Motion ☐
Give Direction ☐	Other: Informational ☒	Attachments ☒

Consider Approval

WORDING FOR AGENDA ITEM: Initial review of County Secondary Road Department Policies for Signs and Driveways.

EXECUTIVE SUMMARY: The attached policies are for board review. The attached policies are presented as enforced at this time. This is an opportunity for the new board for review, discuss, modify (if needed) and renew approval. This review is part of an effort to review and publish all county policies. The review of these two policies is the continuation of this effort by the secondary road department and the Board of Supervisors.

BACKGROUND: Funding is approved through the Regional Planning Agency (RPA)

FINANCIAL IMPACT: These policies direct expenditures within existing approved budget.

RECOMMENDATION: None at this time. Will return for approval at a later date after review by board members.

ACTION REQUIRED: None at this time.

Woodbury County Secondary Roads Department

759 E. Frontage Road • Moville, Iowa 51039
Telephone (712) 279-6484 • (712) 873-3215 • Fax (712) 873-3235

COUNTY ENGINEER
Mark J. Nahra, P.E.
mnahra@sioux-city.org

ASSISTANT TO THE COUNTY ENGINEER
Benjamin T. Kusler, E.I.T.
bkusler@sioux-city.org

SECRETARY
Tish Brice
tbrice@sioux-city.org

PPM #2, 2011
Rev. 1/2012

WOODBURY COUNTY SECONDARY ROAD DEPARTMENT POLICY AND PROCEDURE MEMORANDUM

Sign Installation, Inspection, and Maintenance Program and Policy

Background:

The 2009 Manual on Uniform Traffic Control Devices (MUTCD) is the official sign manual for the State of Iowa as defined in Section 321.252. Woodbury County adopts and follows the appropriate provisions of the MUTCD as required in Section 321.255.

Sign Facing:

The County will use only high intensity or higher grade prismatic sheeting for all traffic signs on county highways. This shall not preclude the County Engineer from utilizing current stock of engineer grade signs that were purchased or installed prior to the adoption of this policy until their usefulness is exhausted. The County Engineer, in his professional judgment, will determine locations where higher grade sheeting is required for additional warning or visibility.

Street Signs:

Street signs shall conform to the Manual on Uniform Traffic Control Devices. Existing signs not in compliance with the current MUTCD standards will be replaced with compliant signs at the end of the current sign's useful life.

Retroreflectivity and nighttime visibility:

Woodbury County will comply with standards for maintaining nighttime sign visibility as required in section 2A.08 of the MUTCD by a program of nighttime visual inspection of county road signs. The retroreflectivity of existing signs will be assessed by a trained sign inspector conducting a visual inspection from a moving vehicle during nighttime conditions. Complete system inspection will be done in compliance with MUTCD recommendations on a bi-annual basis beginning in 2014. Signs that are visually identified by the inspector to have retroreflectivity below the minimum levels will be replaced as soon as budget and staff time allow after being identified by the inspection.

Secondary Road employees will also be encourage to note and turn in reports of damaged signs or signs screened by vegetation as part of their normal duties while performing work on county roads to supplement this inspection program.

Sign Repair and Replacement:

Damaged signs will be repaired or replaced based on the following guidelines:

Stop and Yield Signs: Stop and yield signs will be repaired on a 24 hour per day, 7 day per week basis. Upon receiving a report of the loss or damage to a stop or yield sign from

emergency responders, county emergency dispatchers, secondary road department staff or other reports, county secondary road staff will respond as soon as an employee can be called in to work and travel to the location with a replacement sign. Emergency replacement will normally be accomplished by installing a temporary sign on a support, stand or barricade until a permanent replacement can be installed to replace the damaged sign. If time, conditions at the site, and equipment allow, the damaged sign may be replaced on a permanent post immediately at the discretion of the employee or his immediate supervisor. If not placed on a permanent support as part of the emergency repair, the sign will be permanently replaced after a utility locate is performed, usually within two business days.

Warning and other regulatory signs: Warning and other regulatory signs will be repaired the next business day after being reported to the road department if the sign can be replaced within its existing mounting or post hole. Signs which cannot be replaced in their existing mounting or posthole will be replaced as soon as utility locates can be completed.

Rural intersection signs: Rural intersection signs will be replaced as soon as new signs are available during the sign technician's normal working day. Since rural intersection signs are not always kept in stock, a period of days or weeks may pass before replacement signs can be ordered and manufactured.

Supplemental signs:

This policy serves direction for the placement of certain signs either not contained in the manual or not required by the manual. Examples of signs in this category include: Children at Play, Farm Machinery, Trucks Entering Highway, and historic and park signs as requested by other departments, public agencies, and members of the public. This document outlines Woodbury County's policy for placement of the signs as well as defines who will pay for the signs, posts, and installation of each type of sign.

School related signs: There are two types of school signs, school bus related signs and school warning signs. The installation of both types of signs is not required by the MUTCD and it is not the policy of the Secondary Road Department to place these signs in every location requested by the public. Signs of these types are placed only at the request of the schools under the terms of this policy.

Two types of signs fall into the category of school bus signs, the school bus stop ahead sign and the school bus turnaround sign. Both are designed as warning signs as designated by the MUTCD, but warn of conditions that are not present throughout the day or the year.

These signs may be placed at the request of the school district. Any requests for the placement of these signs must come through the school bus superintendent or the superintendent of the school district. Requests from county residents will be directed to the school district.

Upon receipt of a request from the school bus superintendent or the superintendent of schools for a school bus stop ahead or a school bus turnaround sign, the engineer or designated maintenance staff will review the location for the adequacy of available sight distance according to the MUTCD. The determination of adequate sight distance will be based on whether or not sight distance in advance of the location in question exceeds the values shown in Table 2C-4, Guidelines for Advance Placement of Warning Signs, for the Condition A column of the table. The speed will based upon the legal speed limit of the road, unless there are circumstances present that lead the engineer or maintenance staff to believe that the speed is significantly higher or lower than posted. If the location has less than optimum sight distance, the county will install a sign at the appropriate distance ahead of the school bus stop or turnaround. The county will provide the post, labor and equipment to erect the sign at no cost to the school. Signs no longer needed will be removed upon request of the school

district and stored in the sign shed for the future use of the district. Each school district will be reminded annually to review the need for these signs.

If the location has adequate sight distance for the speed limit of the road, the engineer will recommend to the school official making the request that a sign not be placed. If the school insists that a sign be placed at the location against the recommendation of the engineer, the school will be responsible for all cost associated with the installation including sign, post, labor, and equipment costs.

Children at Play and Related Signs: Children at play, horses on the highway, and other similar warning signs requested by county residents will be installed by the county sign crew when warranted. Upon receipt of a request from a county resident for a sign in this classification, the engineer or designated maintenance staff will review the location for the adequacy of available sight distance according to the MUTCD. The determination of adequate sight distance will be based on whether or not sight distance in advance of the location in question exceeds the values shown in Table 2C-4, Guidelines for Advance Placement of Warning Signs, for Condition A column of the table. The speed will based upon the legal speed limit of the road, unless there are circumstances present that lead the engineer or maintenance staff to believe that the speed is significantly higher or lower than posted. If the location has less than optimum sight distance, the county will install a sign at the appropriate distance ahead of the condition for which the sign is requested. Where signs exceed the minimum requirements of the Condition A distance, signs shall not be installed.

The county will provide the post, labor and equipment to erect the sign. The cost of the sign, post, and labor, including equipment expense, shall be paid by the resident or other party making the request for the sign. The county will install the sign at its staff's earliest convenience.

Signs may not be installed on county right of ways by private property owners. All sign installations will be done by county crews. Signs installed by others will be removed.

Farm Machinery and Trucks Entering Highway signs: Farm machinery, truck entering highway, and other similar warning signs requested by county residents will be installed by the county sign crew when warranted. Upon receipt of a request from a county resident for a sign in this classification, the engineer or designated maintenance staff will review the location for the adequacy of available sight distance according to the MUTCD. The determination of adequate sight distance will be based on whether or not sight distance in advance of the location in question exceeds the values shown in Table 2C-4, Guidelines for Advance Placement of Warning Signs, for the High Judgment Conditions column of the table. Where signs exceed the minimum requirements of the High Judgment Condition distance, signs shall not be installed.

When signs are installed, the cost of the sign and post shall be paid by the resident or other party making the request for the sign. The county will provide the equipment and labor to install the sign at no cost to the party making the request. The county will install the sign at its earliest convenience. If the resident so requests, an advisory speed plate may also be installed with the warning sign. The appropriate advisory speed will be established based on a survey of the location by engineering staff and a determination of stopping sight distance by the county engineer.

Signs may not be installed on county right of ways by private property owners. All sign installations will be done by county crews. Signs installed by others will be removed.

Historic Markers, Park Signs, and other Recreational/Cultural Interest Signs: When requested by IDOT, county or state conservation and park employees or organizations, or the

Woodbury County Historical Society, the County Secondary Road department will install signs of this type on county rights of way. The sponsoring organization will provide funding for purchase and continuing maintenance of signs. The sponsoring organization will also pay for posts and hardware needed to install the signs. The secondary road department will provide equipment and labor for installing the signs, unless a written agreement or other instrument approved and signed by the Board of Supervisors related to such signs provides differently.

If the signs become faded, damaged, lose their reflectivity or are otherwise in poor condition, the secondary road department will contact the sign sponsor and see if they want to replace or repair the sign. If the sponsoring agency is no longer interested in maintaining the sign, the secondary road department will remove the sign at no cost to the sponsoring organization.

APPROVED:

_____

Chair, Woodbury County Board of Supervisors

_____

Mark J. Nahra, Woodbury County Engineer

Woodbury County Secondary Roads Department

759 E. Frontage Road • Moville, Iowa 51039
Telephone (712) 279-6484 • (712) 873-3215 • Fax (712) 873-3235

COUNTY ENGINEER
Mark J. Nahra, P.E.
mnahra@sioux-city.org

ASSISTANT TO THE COUNTY ENGINEER
Benjamin T. Kusler, E.I.T.
bkusler@sioux-city.org

SECRETARY
Tish Brice
tbrice@sioux-city.org

PPM #1, 2011,Rev. 1/2012

WOODBURY COUNTY SECONDARY ROAD DEPARTMENT POLICY AND PROCEDURE MEMORANDUM

Secondary Road Driveways and Entrances

Permits are required for all work done within Woodbury County Secondary Road rights of way as provided in section 318.8 of the Code of Iowa.

Applications for a permit for a new entrance, or to widen or move an existing entrance, shall be directed to the County Engineer's office. The Engineer or District Road Foreman will determine the size and length of culvert needed and will issue a permit of the applicant to construct or widen the entrance. Driveways may be constructed by county staff or contractors hired by the property owner. If the property owner does not construct the driveway under the requirements stated herein, or fails to obtain a permit, the Engineer or Foreman shall notify the property owner of the correction needed and allow 30 days for the property owner to make the correction. If the property owner does not comply with the correction needed, the County will remove the entrance at a cost to the applicant of up to $500.

The County will determine the need for and size of culverts for each proposed entrance. The minimum culvert diameter is 24-inches unless an exception is approved by the county engineer. Only new corrugated metal or new reinforced concrete pipes are allowed for use in Woodbury County rights of way. Corrugated metal pipe shall be a minimum of 14 gauge for sizes from 24" to 42" and 12 gauge for 48" and larger diameters. The maximum allowable entrance top width is 30 feet, except by special permit.

DRIVEWAY WIDENING:
Prior to approving driveway widening requests, the county will check the existing driveway culvert for structural soundness. If the existing culvert is in poor condition at the time an extension is requested, the county may require the replacement the entire culvert, not just add the desired extra width. The permittee will be billed for the portion of new culvert and band necessary to widen the driveway to meet current county standards.

DRIVEWAY MAINTENANCE:
The County will be responsible for all continuing maintenance on driveways and field entrances. The county will maintain, repair, or replace driveways constructed within the

county right of way, including when driveways are widened, flattened, or replaced in the course of a county construction or maintenance project. The county will maintain rock surfacing driveways for house and building sites only, unless exceptions are made by the county engineer. Landowners may provide their own rock surfacing for any driveway or field entrance at their own expense.

If the driveway culvert fails for any reason, is blocked and ponding water in the ditch, or if the driveway needs to be reconstructed in the course of ditch cleaning or other maintenance work, the county will contact the property owner to see if the driveway is still needed. If the driveway is still needed, the county will do all work to replace the culvert under the driveway and replace any surfacing gravel or aggregate lost at no additional cost to the landowner in the course of maintenance work.

DRIVEWAY ELIMINATION:
If a driveway is no longer needed, the county will remove the driveway as part of maintenance work or ditch cleaning at no cost to the landowner. The property owner may opt to keep the culvert, if one is present, from the driveway after removal, but may not use this pipe at another location within the right of way.

CONSTRUCTION REQUIREMENTS FOR DRIVEWAYS BUILT BY OTHERS:
Property owners constructing their own driveways may not use dirt from the ditch to build the driveway unless the County grants written permission on the permit form. The locating of underground utilities shall be the responsibility of the applicant and may be done by contacting Iowa One Call at 1-800-292-8989.

GENERAL REQUIREMENTS:
Entrance side slopes shall be 6:1 or flatter on all paved roads. Entrance slopes on granular surfaced or dirt roads shall be 3:1 or flatter. **The construction of vertical headwalls for decorative or driveway widening is not permitted.** The County considers such headwalls to be obstructions in the right of way and will require their removal at the landowner's expense.

Minimum sight distance requirements for house, field or business entrances and private road intersections as shown below:

Road Speed Limit	Single Lot Access	Paved Road Single Access	Minor Subdivision Road	Major Subdivision Road	Commercial Business Drive/Road
25 mph	150 feet	200 feet	250 feet	325 feet	325 feet
30 mph	200 feet	250 feet	325 feet	400 feet	400 feet
35 mph	250 feet	350 feet	400 feet	475 feet	475 feet
40 mph	325 feet	425 feet	475 feet	550 feet	550 feet
45 mph	400 feet	500 feet	550 feet	650 feet	650 feet
50 mph	475 feet	550 feet	650 feet	725 feet	725 feet
55 mph	550 feet	600 feet	725 feet	800 feet	850 feet

Speed limit is based on the posted speed limit established by the Woodbury County Board of Supervisors or by the Code of Iowa, Section 321.285 where the speed limit is not posted. Driveways and roads will not be approved unless they meet the minimum sight distance requirements of this section. Exceptions to the sight distance requirements may be made if, due to road alignment, proximity to an intersection or other geometric feature prevents traffic from driving the legal speed limit of the road in question. The county engineer will be the final judge in such cases and a driveway may not be approved if it cannot be safely located.

Every driveway is a potential collision location along the roadway. As such, driveways are limited to locations where sight distance is adequate and installed as needed for land access. Only one driveway is allowed per rural residential lot under 10 acres in size. Circle driveways (two separate driveways in the ditch connected by a continuous lane or driveway on private property) are not allowed on rural residential properties.

All entrances on paved roads shall be rock surfaced from the edge of the shoulder to the right of way line. Asphalt or Portland Cement Concrete paved driveways are not allowed within Woodbury County rights of way on paved roads without special permit from the Engineer's office. Maintenance of all paved driveways or private subdivision streets within Woodbury County rights of way is the responsibility of the landowner/applicant/homeowners association. Asphalt and concrete paved driveways on granular surfaced roadways are prohibited.

Driveways require a minimum setback of 125 feet from county road intersections. New driveways connected directly to intersections will not be allowed. Driveways must be separated by at least 50 feet to allow drainage of the road surface to the ditch.

MULTIPLE DRIVEWAYS FOR AGRICULTURAL PROPERTY:
Multiple driveways may be allowed for farm property access. Driveways may be installed along a farm boundary as needed for farm operations as long as driveways meet sight distance and separation requirements. A farm property may be served by a single driveway for the residence, plus a second driveway to allow access to farm buildings or grain bins. Field entrances will be approved as sight distance allows and as a general rule, up to two field entrances may be allowed per forty (40) acre field. Farm access drives and field entrances may be up to 40 feet in top width. Exceptions for special access needs may be granted by the county engineer.

APPROVED:

_____
Chairman-Woodbury County Board of Supervisors

_____
Mark J. Nahra, Woodbury County Engineer

Attachments: Permit for Entrance
Permit to Pave a Residence or Business Entrance
Permit for Extra Wide Driveways

#14c

WOODBURY COUNTY BOARD OF SUPERVISORS AGENDA ITEM(S) RE

Date: April 30, 2015

Weekly Agenda Date: ~~April 28~~ May 5, 2015

DEPARTMENT HEAD / CITIZEN: Mark J. Nahra P.E. Secondary Roads Dept Head

SUBJECT: **Consideration of permit for overhead or underground utilities in the Highway Right of Way.**

ACTION REQUIRED:

Approve Ordinance ☐	Approve Resolution ☐	Approve Motion ☒
Give Direction ☐	Other: Informational ☐	Attachments ☒

Consideration X

WORDING FOR AGENDA ITEM: Consideration of permit for installation of underground electric lines within the Highway Right of Way for Woodbury County REC to provide service to a new home site on Lee Avenue.

EXECUTIVE SUMMARY: Permittee working within right of way on a utility project.

BACKGROUND: Work in the county ROW requires a permit from the Board of Supervisors per section 318.8 of the Code of Iowa. Due to time constraints for the new home construction, I gave the applicant administrative approval to begin installation of the new utility line. I am requesting the Board approve this action retroactively to April 28, 2015.

FINANCIAL IMPACT: None

RECOMMENDATION: Recommend approval of application.

ACTION REQUIRED: Motion to approve permit to work place underground utilities in the right of way for Woodbury County REC.

Woodbury County Permit No._____

PERMIT FOR USE OF COUNTY ROAD/HIGHWAY RIGHT-OF-WAY FOR OVERHEAD AND/OR BURIED UTILITIES ACCOMMODATION

REQUEST BY APPLICANT:

Name Woodbury County REC

Address 1495 Humbolt Ave. Moville

Highway _____

Township _____

City of _____

Office Phone 712-873-3125 Local Phone _____

Section: ¼ of ¼ Sec

Type of Utility Installation Primary Electric

T 88 N, R 44 W

Plans Prepared By Nate Bauer

Copy Enclosed X Yes ____ No

Map Showing Location Enclosed X Yes ____ No

Utility Location is ____ cross right-of-way X parallel to right-of-way

____ overhead X underground

Proposed Method of Installation

____ tunnel	____ suspend on poles	____ cased
X jack & bore	____ suspend on towers	____ trench
____ open cut	X plow	

Estimated Starting Date MAY 4, 2015 Estimated Restoration Date MAY 22, 2015

The Applicant understands and agrees that the permitted work shall comply with all permit provisions and conditions listed on the reverse side hereof, and special provisions listed below or attached hereto, and any and all plans, details, or notes attached hereto and made a part thereof. Applicant is to complete in triplicate and send all copies including plans and maps to Woodbury County Engineer, 759 E. Frontage Road, Moville, IA 51039. One executed copy will be returned to the Applicant.

By Nate Bauer
(Signature of Authorized Utility Representative)

Title Director of Operations

Date 4-24-15

PERMIT APPROVAL BY PERMITTING AUTHORITY

The forgoing application is hereby approved and permit issued by the Permitting Authority subject to full compliance by the Applicant with all provisions and conditions stated herein and on the reverse side hereof and all attachments hereto.

By _____
(Signature of Woodbury County Board Chairman)

Title _____

Date _____

By Mark J. Nahra
(Signature of Woodbury County Engineer)

Title County Engineer

Date 4/28/2015

Other Special Provisions:

Permit Provisions and Conditions of Issuance

1. The County and/or the County Board of Supervisors will not be charged with any responsibility for damages to the Applicant's property occasioned by any construction or maintenance operations on said county roads, including new or additional right-of-way acquired in connection therewith, subsequent to the building of the Applicant's facilities. The Board will endeavor to give the Applicant sufficient notice of any proposed construction or maintenance work, on either existing or newly acquired right-of-way that is likely to expose, cover up, or disturb any facilities belonging to the Applicant, in order that the Applicant may arrange to protect the facilities. The Board will inform contractors, and others working on the job of the location of the facilities so that reasonable care may be taken to avoid damaging the facilities, however the County and the Board of Supervisors will assume no responsibility for failure to give such notice.

2. The Applicant shall take all reasonable precaution during the construction of said facilities to protect and safeguard the lives and property of the adjacent property owners and the traveling public and shall save the County and the Board of Supervisors harmless of any damages or losses that may be sustained by adjacent property owners and the traveling public on account of such construction operations.

3. Operations in the construction and maintenance of said facilities shall be carried on in such a way as to not interfere with, or interrupt traffic on said roads. However, should the performance of work called for in this permit in any way interfere with or obstruct traffic on said roads, the Applicant shall provide the necessary flagmen as required by the Statutes when one-way traffic is involved and/or otherwise mark said work so as to protect the traveling public.

4. The Applicant shall hold the County and the Board of Supervisors harmless from any damages that may result to said highway because of the construction or maintenance of said facilities and shall reimburse the County or the Board of Supervisors for any expenditures that the County or the Board of Supervisors may have to make on said roads on account of replacement of surfacing gravel and bridge and culvert repairs.

5. Applicant shall lay, construct, operate and maintain said facilities so as not to interfere with natural drainage of the road and so as not to interfere with the construction or maintenance of said roads. When buried cable or wire lines are to be placed lengthwise with the roadway, they shall be placed in the County road shoulder or ditch near the toe of the fore-slope and parallel to centerline of roadbed at a depth of three (3) to four (4) feet by using specially designed plows or by trenching, whichever is appropriate. Plow slots and trenches shall be repacked as necessary to restore the disturbed area to its original condition. For buried line crossings of roadways not paved, an open trench may be dug and the lines placed therein, and the trench back-filled over the lines. Buried line crossings on paved roadways, lines may be placed through the sub-grade by jacking, or by boring a hole just large enough to take the lines; or if the County Engineer approves, a tunnel may be dug through and the cable or wire lines placed therein. All backfill of tunnels and trenches shall be thoroughly compacted in layers of 6" or less in depth. Back-filling of trenches within the right-of-way by not under the traveled roadway shall be tamped sufficiently to avoid settlement. When crossing an existing roadway, all buried facilities shall be placed a minimum of three (3) to four (4) below the bottom of the existing adjacent ditches. Overhead lines, where practical, shall be placed adjacent to and with two (2) feet of the Road/Highway Right-of-Way Line.

6. The Applicant will at any time subsequent to placing the facilities, and at the Applicant's expense, relay, replace, alter, change, reconstruct, or relocate its overhead and/or buried facilities and appurtenances thereto as may become necessary to conform to new grades, alignment, or widening right-of-way, resulting from maintenance or construction operations by the County Board of Supervisors irrespective of whether or not additional right-of-way is acquired in connection with such road improvements. The Applicant agrees to do this within ninety (90) days written notice from the Board of Supervisors, and without cost to the County. If the Applicant is unable to comply within said ninety (90) days, the Board of Supervisors may cause the work to be done and the Applicant will pay the cost thereof upon receipt of statement.

7. All work shall be done in a workmanlike manner; the surrounding ground, slopes, and ditch bottoms shall be reshaped to conform to the area and left in a neat condition satisfactory to the County Engineer. All areas where sod has been damaged or destroyed shall be re-seeded.

8. The Applicant shall notify the County Board of Supervisors at least forty-eight (48) hours in advance of the Applicant's intention of starting work covered by this permit on the road right-of-way. Said notice shall be in writing to the County Engineer.

9. Applicant, its' successors, grantees and assigns shall and hereby agrees to assume all responsibility, risks and liabilities for all accidents and damages that may occur to persons and/or property on account of the work done under this permit, and to this end, indemnify and hold the County and all authorized representatives thereof harmless from any and all claims, damages, losses, and expense including judgements, costs and including attorney's fees, for personal injuries (including death) or property damage arising or resulting from the activities of the Applicant in connection herewith, now and at all times in the future.

10. It is understood that this permit is issued only insofar as Woodbury County has jurisdiction and does not presume to release the Applicant from fulfilling any existing statutes relating to the installation, construction and operation of said facilities.

11. It is further understood that the facilities covered by this permit shall be constructed or installed within one (1) year after the date of approval of this permit, unless otherwise extended in writing by Woodbury County.

12. Engagement in the operations as herein applied for by the Applicant shall be considered and constitute an acceptance of all the terms and conditions herein set forth.

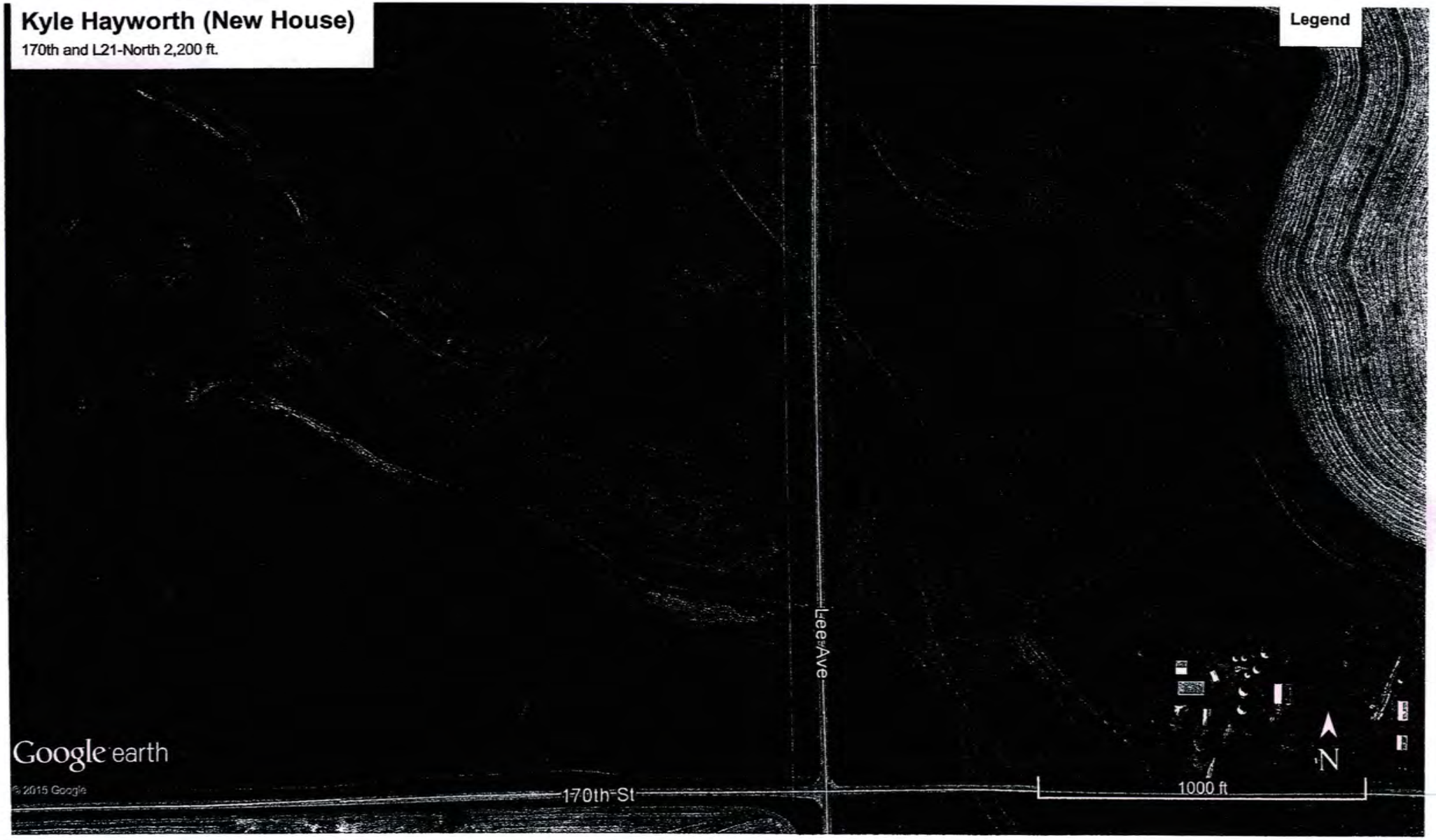
Kyle Hayworth (New House)
170th and L21-North 2,200 ft.
Legend
Lee Ave
170th St
1000 ft
N
Google earth
© 2015 Google

WOODBURY COUNTY BOARD OF SUPERVISORS AGENDA ITEM(S) REQ

#14f

Date: April 30, 2015

Weekly Agenda Date: May 5, 2015

DEPARTMENT HEAD / CITIZEN: Mark J. Nahra P.E. Secondary Roads Dept Head

SUBJECT: **Consideration of permit for overhead or underground utilities in the Highway Right of Way.**

ACTION REQUIRED:

Approve Ordinance ☐	Approve Resolution ☐	Approve Motion ☒
Give Direction ☐	Other: Informational ☐	Attachments ☒

Consideration X

WORDING FOR AGENDA ITEM: Consideration of permit for installation of underground electric lines within the Highway Right of Way for Woodbury County REC to provide service to run new line south of Anthon.

EXECUTIVE SUMMARY: Permittee working within right of way on a utility project.

BACKGROUND: Work in the county ROW requires a permit from the Board of Supervisors per section 318.8 of the Code of Iowa.

FINANCIAL IMPACT: None

RECOMMENDATION: Recommend approval of application.

ACTION REQUIRED: Motion to approve permit to work place underground utilities in the right of way for Woodbury County REC.

Approved by Board of Supervisors March 3, 2015.

Woodbury County Permit No._____

PERMIT FOR USE OF COUNTY ROAD/HIGHWAY RIGHT-OF-WAY FOR OVERHEAD AND/OR BURIED UTILITIES ACCOMMODATION

REQUEST BY APPLICANT:

Name Woodbury County REC

Address 1495 Humboldt Ave. Moville

Highway _____

Township _____

City of _____

Office Phone 712-873-3125 Local Phone _____

Section: ¼ of ¼ Sec

Type of Utility Installation Primary Electric

T 87 N, R 43 W + T 87 N R 42 W

Plans Prepared By DGR

Copy Enclosed X Yes ____ No

Map Showing Location Enclosed X Yes ____ No

Utility Location is

____ cross right-of-way

X parallel to right-of-way

____ overhead

X underground

Proposed Method of Installation

____ tunnel	____ suspend on poles	____ cased
X jack & bore	____ suspend on towers	____ trench
____ open cut	X plow	

Estimated Starting Date May 15, 2015 Estimated Restoration Date October 30, 2015

The Applicant understands and agrees that the permitted work shall comply with all permit provisions and conditions listed on the reverse side hereof, and special provisions listed below or attached hereto, and any and all plans, details, or notes attached hereto and made a part thereof. Applicant is to complete in triplicate and send all copies including plans and maps to Woodbury County Engineer, 759 E. Frontage Road, Moville, IA 51039. One executed copy will be returned to the Applicant.

By Nate Bauer
(Signature of Authorized Utility Representative)

Title Director of Operation

Date 4-24-15

PERMIT APPROVAL BY PERMITTING AUTHORITY

The forgoing application is hereby approved and permit issued by the Permitting Authority subject to full compliance by the Applicant with all provisions and conditions stated herein and on the reverse side hereof and all attachments hereto.

By _____
(Signature of Woodbury County Board Chairman)

Title _____

Date _____

By Mark J. Nahra
(Signature of Woodbury County Engineer)

Title County Engineer

Date 4/30/2015

Other Special Provisions:

Work at the intersection of Mason Avenue and 250th Street is not to proceed until final county road design is completed.

Permit Provisions and Conditions of Issuance

1. The County and/or the County Board of Supervisors will not be charged with any responsibility for damages to the Applicant's property occasioned by any construction or maintenance operations on said county roads, including new or additional right-of-way acquired in connection therewith, subsequent to the building of the Applicant's facilities. The Board will endeavor to give the Applicant sufficient notice of any proposed construction or maintenance work, on either existing or newly acquired right-of-way that is likely to expose, cover up, or disturb any facilities belonging to the Applicant, in order that the Applicant may arrange to protect the facilities. The Board will inform contractors, and others working on the job of the location of the facilities so that reasonable care may be taken to avoid damaging the facilities, however the County and the Board of Supervisors will assume no responsibility for failure to give such notice.

2. The Applicant shall take all reasonable precaution during the construction of said facilities to protect and safeguard the lives and property of the adjacent property owners and the traveling public and shall save the County and the Board of Supervisors harmless of any damages or losses that may be sustained by adjacent property owners and the traveling public on account of such construction operations.

3. Operations in the construction and maintenance of said facilities shall be carried on in such a way as to not interfere with, or interrupt traffic on said roads. However, should the performance of work called for in this permit in any way interfere with or obstruct traffic on said roads, the Applicant shall provide the necessary flagmen as required by the Statutes when one-way traffic is involved and/or otherwise mark said work so as to protect the traveling public.

4. The Applicant shall hold the County and the Board of Supervisors harmless from any damages that may result to said highway because of the construction or maintenance of said facilities and shall reimburse the County or the Board of Supervisors for any expenditures that the County or the Board of Supervisors may have to make on said roads on account of replacement of surfacing gravel and bridge and culvert repairs.

5. Applicant shall lay, construct, operate and maintain said facilities so as not to interfere with natural drainage of the road and so as not to interfere with the construction or maintenance of said roads. When buried cable or wire lines are to be placed lengthwise with the roadway, they shall be placed in the County road shoulder or ditch near the toe of the fore-slope and parallel to centerline of roadbed at a depth of three (3) to four (4) feet by using specially designed plows or by trenching, whichever is appropriate. Plow slots and trenches shall be repacked as necessary to restore the disturbed area to its original condition. For buried line crossings of roadways not paved, an open trench may be dug and the lines placed therein, and the trench back-filled over the lines. Buried line crossings on paved roadways, lines may be placed through the sub-grade by jacking, or by boring a hole just large enough to take the lines; or if the County Engineer approves, a tunnel may be dug through and the cable or wire lines placed therein. All backfill of tunnels and trenches shall be thoroughly compacted in layers of 6" or less in depth. Back-filling of trenches within the right-of-way by not under the traveled roadway shall be tamped sufficiently to avoid settlement. When crossing an existing roadway, all buried facilities shall be placed a minimum of three (3) to four (4) below the bottom of the existing adjacent ditches. Overhead lines, where practical, shall be placed adjacent to and with two (2) feet of the Road/Highway Right-of-Way Line.

6. The Applicant will at any time subsequent to placing the facilities, and at the Applicant's expense, relay, replace, alter, change, reconstruct, or relocate its overhead and/or buried facilities and appurtenances thereto as may become necessary to conform to new grades, alignment, or widening right-of-way, resulting from maintenance or construction operations by the County Board of Supervisors irrespective of whether or not additional right-of-way is acquired in connection with such road improvements. The Applicant agrees to do this within ninety (90) days written notice from the Board of Supervisors, and without cost to the County. If the Applicant is unable to comply within said ninety (90) days, the Board of Supervisors may cause the work to be done and the Applicant will pay the cost thereof upon receipt of statement.

7. All work shall be done in a workmanlike manner; the surrounding ground, slopes, and ditch bottoms shall be reshaped to conform to the area and left in a neat condition satisfactory to the County Engineer. All areas where sod has been damaged or destroyed shall be re-seeded.

8. The Applicant shall notify the County Board of Supervisors at least forty-eight (48) hours in advance of the Applicant's intention of starting work covered by this permit on the road right-of-way. Said notice shall be in writing to the County Engineer.

9. Applicant, its' successors, grantees and assigns shall and hereby agrees to assume all responsibility, risks and liabilities for all accidents and damages that may occur to persons and/or property on account of the work done under this permit, and to this end, indemnify and hold the County and all authorized representatives thereof harmless from any and all claims, damages, losses, and expense including judgements, costs and including attorney's fees, for personal injuries (including death) or property damage arising or resulting from the activities of the Applicant in connection herewith, now and at all times in the future.

10. It is understood that this permit is issued only insofar as Woodbury County has jurisdiction and does not presume to release the Applicant from fulfilling any existing statutes relating to the installation, construction and operation of said facilities.

11. It is further understood that the facilities covered by this permit shall be constructed or installed within one (1) year after the date of approval of this permit, unless otherwise extended in writing by Woodbury County.

12. Engagement in the operations as herein applied for by the Applicant shall be considered and constitute an acceptance of all the terms and conditions herein set forth.

#149

WOODBURY COUNTY BOARD OF SUPERVISORS AGENDA ITEM(S) RE

Date: April 30, 2015

Weekly Agenda Date: May 5, 2015

DEPARTMENT HEAD / CITIZEN: Mark J. Nahra P.E. Secondary Roads Dept Head

SUBJECT: **Consideration of permit for overhead or underground utilities in the Highway Right of Way.**

ACTION REQUIRED:

Approve Ordinance ☐	Approve Resolution ☐	Approve Motion ☒
Give Direction ☐	Other: Informational ☐	Attachments ☒

Consideration X

WORDING FOR AGENDA ITEM: Consideration of permit for installation of underground electric lines within the Highway Right of Way for Woodbury County REC to provide service to run new line in Grant Township.

EXECUTIVE SUMMARY: Permittee working within right of way on a utility project.

BACKGROUND: Work in the county ROW requires a permit from the Board of Supervisors per section 318.8 of the Code of Iowa.

FINANCIAL IMPACT: None

RECOMMENDATION: Recommend approval of application.

ACTION REQUIRED: Motion to approve permit to work place underground utilities in the right of way for Woodbury County REC.

Approved by Board of Supervisors March 3, 2015.

Woodbury County Permit No._____

PERMIT FOR USE OF COUNTY ROAD/HIGHWAY RIGHT-OF-WAY FOR OVERHEAD AND/OR BURIED UTILITIES ACCOMMODATION

REQUEST BY APPLICANT:

Name Woodbury County REC

Address 1495 Humboldt Ave. Moville

Highway _____

Township _____

City of _____

Office Phone 712-873-3125 Local Phone _____

Section: ¼ of ¼ Sec T 87 N, R 44W & T 86 N R 44 W

Type of Utility Installation Primary Electric

Plans Prepared By DGI2

Copy Enclosed X Yes ____ No

Map Showing Location Enclosed X Yes ____ No

Utility Location is ____ cross right-of-way X parallel to right-of-way

____ overhead ____ underground

Proposed Method of Installation

____ tunnel ____ suspend on poles ____ cased

X jack & bore ____ suspend on towers ____ trench

____ open cut X plow

Estimated Starting Date MAY, 15, 2015 Estimated Restoration Date October 30, 2015

The Applicant understands and agrees that the permitted work shall comply with all permit provisions and conditions listed on the reverse side hereof, and special provisions listed below or attached hereto, and any and all plans, details, or notes attached hereto and made a part thereof. Applicant is to complete in triplicate and send all copies including plans and maps to Woodbury County Engineer, 759 E. Frontage Road, Moville, IA 51039. One executed copy will be returned to the Applicant.

By Nate Baum (Signature of Authorized Utility Representative)

Title Director of Operations

Date 4-24-15

PERMIT APPROVAL BY PERMITTING AUTHORITY

The forgoing application is hereby approved and permit issued by the Permitting Authority subject to full compliance by the Applicant with all provisions and conditions stated herein and on the reverse side hereof and all attachments hereto.

By _____ (Signature of Woodbury County Board Chairman)

Title _____

Date _____

By Mark J. Nelson (Signature of Woodbury County Engineer)

Title County Engineer

Date 4/30/2015

Other Special Provisions:

Utility to bore under or around all cross road culverts. Applicant may not install underground lines above county drainage structures

Permit Provisions and Conditions of Issuance

1. The County and/or the County Board of Supervisors will not be charged with any responsibility for damages to the Applicant's property occasioned by any construction or maintenance operations on said county roads, including new or additional right-of-way acquired in connection therewith, subsequent to the building of the Applicant's facilities. The Board will endeavor to give the Applicant sufficient notice of any proposed construction or maintenance work, on either existing or newly acquired right-of-way that is likely to expose, cover up, or disturb any facilities belonging to the Applicant, in order that the Applicant may arrange to protect the facilities. The Board will inform contractors, and others working on the job of the location of the facilities so that reasonable care may be taken to avoid damaging the facilities, however the County and the Board of Supervisors will assume no responsibility for failure to give such notice.

2. The Applicant shall take all reasonable precaution during the construction of said facilities to protect and safeguard the lives and property of the adjacent property owners and the traveling public and shall save the County and the Board of Supervisors harmless of any damages or losses that may be sustained by adjacent property owners and the traveling public on account of such construction operations.

3. Operations in the construction and maintenance of said facilities shall be carried on in such a way as to not interfere with, or interrupt traffic on said roads. However, should the performance of work called for in this permit in any way interfere with or obstruct traffic on said roads, the Applicant shall provide the necessary flagmen as required by the Statutes when one-way traffic is involved and/or otherwise mark said work so as to protect the traveling public.

4. The Applicant shall hold the County and the Board of Supervisors harmless from any damages that may result to said highway because of the construction or maintenance of said facilities and shall reimburse the County or the Board of Supervisors for any expenditures that the County or the Board of Supervisors may have to make on said roads on account of replacement of surfacing gravel and bridge and culvert repairs.

5. Applicant shall lay, construct, operate and maintain said facilities so as not to interfere with natural drainage of the road and so as not to interfere with the construction or maintenance of said roads. When buried cable or wire lines are to be placed lengthwise with the roadway, they shall be placed in the County road shoulder or ditch near the toe of the fore-slope and parallel to centerline of roadbed at a depth of three (3) to four (4) feet by using specially designed plows or by trenching, whichever is appropriate. Plow slots and trenches shall be repacked as necessary to restore the disturbed area to its original condition. For buried line crossings of roadways not paved, an open trench may be dug and the lines placed therein, and the trench back-filled over the lines. Buried line crossings on paved roadways, lines may be placed through the sub-grade by jacking, or by boring a hole just large enough to take the lines; or if the County Engineer approves, a tunnel may be dug through and the cable or wire lines placed therein. All backfill of tunnels and trenches shall be thoroughly compacted in layers of 6" or less in depth. Back-filling of trenches within the right-of-way by not under the traveled roadway shall be tamped sufficiently to avoid settlement. When crossing an existing roadway, all buried facilities shall be placed a minimum of three (3) to four (4) below the bottom of the existing adjacent ditches. Overhead lines, where practical, shall be placed adjacent to and with two (2) feet of the Road/Highway Right-of-Way Line.

6. The Applicant will at any time subsequent to placing the facilities, and at the Applicant's expense, relay, replace, alter, change, reconstruct, or relocate its overhead and/or buried facilities and appurtenances thereto as may become necessary to conform to new grades, alignment, or widening right-of-way, resulting from maintenance or construction operations by the County Board of Supervisors irrespective of whether or not additional right-of-way is acquired in connection with such road improvements. The Applicant agrees to do this within ninety (90) days written notice from the Board of Supervisors, and without cost to the County. If the Applicant is unable to comply within said ninety (90) days, the Board of Supervisors may cause the work to be done and the Applicant will pay the cost thereof upon receipt of statement.

7. All work shall be done in a workmanlike manner; the surrounding ground, slopes, and ditch bottoms shall be reshaped to conform to the area and left in a neat condition satisfactory to the County Engineer. All areas where sod has been damaged or destroyed shall be re-seeded.

8. The Applicant shall notify the County Board of Supervisors at least forty-eight (48) hours in advance of the Applicant's intention of starting work covered by this permit on the road right-of-way. Said notice shall be in writing to the County Engineer.

9. Applicant, its' successors, grantees and assigns shall and hereby agrees to assume all responsibility, risks and liabilities for all accidents and damages that may occur to persons and/or property on account of the work done under this permit, and to this end, indemnify and hold the County and all authorized representatives thereof harmless from any and all claims, damages, losses, and expense including judgements, costs and including attorney's fees, for personal injuries (including death) or property damage arising or resulting from the activities of the Applicant in connection herewith, now and at all times in the future.

10. It is understood that this permit is issued only insofar as Woodbury County has jurisdiction and does not presume to release the Applicant from fulfilling any existing statutes relating to the installation, construction and operation of said facilities.

11. It is further understood that the facilities covered by this permit shall be constructed or installed within one (1) year after the date of approval of this permit, unless otherwise extended in writing by Woodbury County.

12. Engagement in the operations as herein applied for by the Applicant shall be considered and constitute an acceptance of all the terms and conditions herein set forth.

WOODBURY COUNTY BOARD OF SUPERVISORS AGENDA ITEM(S) REQ

#15

Date: April 28, 2015

Weekly Agenda Date: May 5, 2015

DEPARTMENT HEAD / CITIZEN: Mark J. Nahra P.E. Secondary Roads Dept Head

SUBJECT: **Consideration of requesting quote for maintenance work on the Orton Slough.**

ACTION REQUIRED:

Approve Ordinance ☐	Approve Resolution ☐	Approve Motion ☒
Give Direction ☐	Other: Informational ☐	Attachments ☒

Consideration X

WORDING FOR AGENDA ITEM: Consideration of plans and approval to go out for a quote for maintenance work on the Orton Slough drainage district.

EXECUTIVE SUMMARY: The Board of Supervisors, serving as drainage district trustees, directed ISG to prepare plans to repair the existing tile line that serves the Orton Slough Drainage District. Those plans are complete and the county engineer is seeking permission to obtain a quotation to do the work.

BACKGROUND: Bidding requirement under Chapter 468 of the Code of Iowa provides for the "Board at any time on its own motion, without notice, may order done whatever is necessary to restore or maintain a drainage or levee improvement in its original efficiency or capacity, and for that purpose may remove silt and debris, repair any damaged structures, remove weeds and other vegetable growth, and whatever else may be needed to restore or maintain such efficiency or capacity or to prolong its useful life." When the estimated cost is below $50,000, the district may contact one contractor and obtain only one quote (see attached).

FINANCIAL IMPACT: Project work will be paid by drainage district assessment.

RECOMMENDATION: Recommend allowing county engineer to obtain a quotation on behalf of the drainage district.

ACTION REQUIRED: Motion to allow the county engineer to obtain quote for tile repair for the Orton Slough Drainage District.

Approved by Board of Supervisors March 3, 2015.

BIDDING REQUIREMENTS
IOWA CODE SECTION 468
LEVEE AND DRAINAGE DISTRICTS AND IMPROVEMENTS

468.126 Repairs and improvements.

1a. The board at any time on its own motion, without notice, may order done whatever is necessary to restore or maintain a drainage or levee improvement in its original efficiency or capacity, and for that purpose may remove silt and debris, repair any damaged structures, remove weeds and other vegetable growth, and whatever else may be needed to restore or maintain such efficiency or capacity or to prolong its useful life.

c. When ordering a repair under this section, the board and any bidders shall comply with the competitive bid requirements applicable to a governing entity ordering the construction of a public improvement in chapter 26. If the repair is more than fifty thousand dollars but less than the competitive bid threshold in section 26.3, the board shall conduct a hearing on the matter of making the proposed repair. The board shall provide notice of the hearing as provided in sections 468.14 through 468.18.

4b. When ordering the construction of an improvement under this subsection, the board shall comply with the competitive bid requirements applicable to a governing entity ordering the construction of a public improvement in chapter 26. If the improvement is more than fifty thousand dollars but less than the competitive bid threshold in section 26.3, the board shall conduct a hearing on the matter of making the proposed improvement. The board shall provide notice of the hearing as provided in sections 468.14 through 468.18.

PROPOSED TILE & INTAKE REPAIRS
ORTON SLOUGH DRAINAGE DISTRICT
WOODBURY COUNTY, IOWA
2015

WOODBURY COUNTY, IOWA **ISG PROJECT # 16118**

AERIAL LOCATION MAP
1" = 5000'

SHEET INDEX

A.01	TITLE SHEET
A.02	LOCATION MAP & CONSTRUCTION NOTES
B.01	INTAKE REPAIR DETAILS

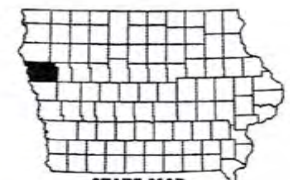

STATE MAP
NOT TO SCALE

I hereby certify that this engineering document was prepared by me or under my direct personal supervision and that I am a duly licensed Professional Engineer under the laws of the State of Iowa.

Brian W. Blomme 04-30-2015
Brian W. Blomme Date
This certification covers the following sheets:

My license renewal date is December 31, 2015.

COUNTY LOCATION MAP

ISG
Architecture Engineering Environmental Planning
www.isg-gp.com
I+S GROUP

THIS DOCUMENT IS THE PROPERTY OF I+S GROUP, INC AND MAY NOT BE USED, COPIED OR DUPLICATED WITHOUT PRIOR WRITTEN CONSENT

PROJECT
PROPOSED TILE & INTAKE REPAIR ORTON SLOUGH DRAINAGE DISTRICT

WOODBURY COUNTY IOWA

REVISION SCHEDULE

NO	DATE	DESCRIPTION

PROJECT NO	16118
FILE NAME	16118 TITLE SHEET
DRAWN BY	N. HITZBOWE YUAGINGER
DESIGNED BY	B. BLOMME
REVIEWED BY	I. DROSSLER
ISSUE DATE	4/24/15
CLIENT PROJECT NO	

TITLE
TITLE PAGE

SHEET
A.01

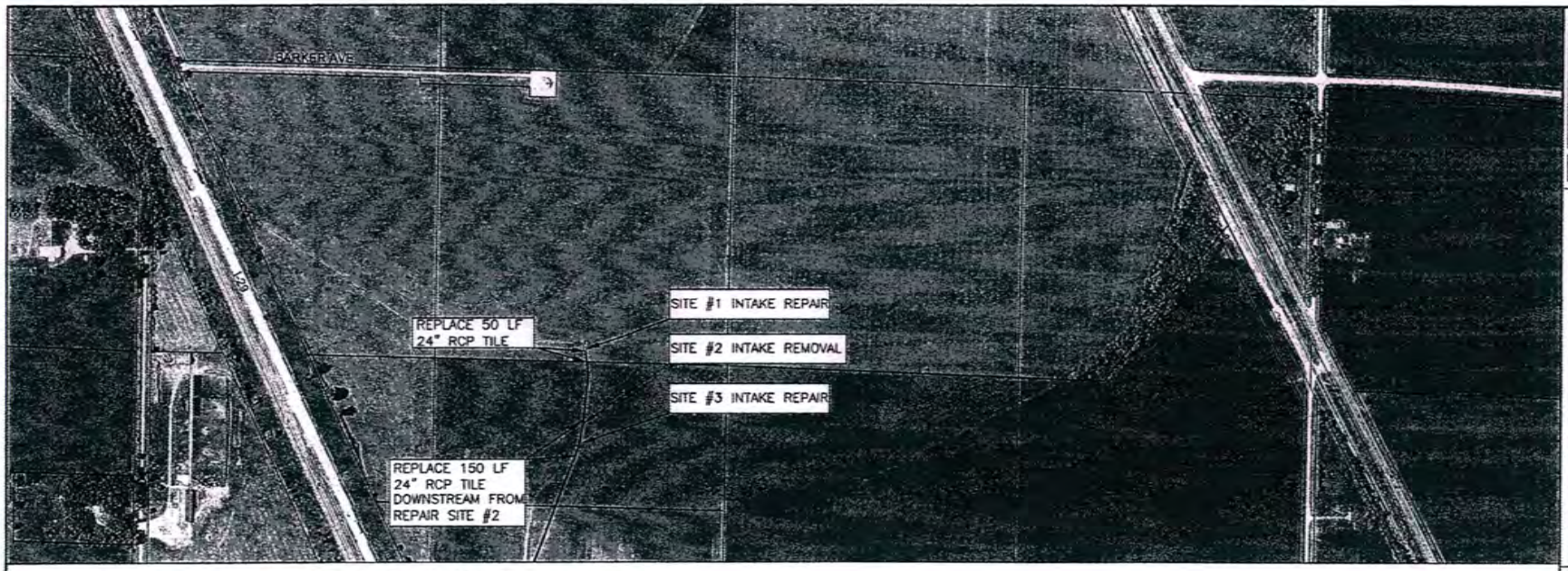

CONSTRUCTION NOTES:

1. WORK LIMITS - WORK LIMITS EXTEND FROM CENTERLINE OF TILE, BOTH DIRECTIONS 100 FEET, EXCEPT WHERE LIMITED BY ROAD RIGHT-OF-WAY.
2. ACCESS IS AVAILABLE AT INTERSECTIONS OF WORK LIMITS AND PUBLIC ROADS OR AS CAN BE OTHERWISE ARRANGED BY CONTRACTOR. CONTRACTOR IS RESPONSIBLE TO SECURE PERMISSION OF COUNTY ENGINEER TO CONSTRUCT TEMPORARY ACCESSES IF NECESSARY.
3. FERTILIZING AND SEEDING - ALL DISTURBED AREAS IN EXISTING CRP ARE TO BE FERTILIZED AND SEEDED IN ACCORDANCE WITH SECTION 329220, WITH WETLAND GRASS SEED MIXTURE.
4. RUBBISH DISPOSAL - ALL BROKEN CONCRETE TILE, ROCKS, OR OTHER RUBBISH UNCOVERED DURING REPAIR AND GRADING OPERATIONS IS TO BE BURIED ON SITE WITHIN WORK LIMITS, WITH MINIMUM 36" COVER.
5. UTILITIES - CONTRACTOR IS RESPONSIBLE TO NOTIFY ALL UTILITY COMPANIES AND TO COOPERATE WITH THEM IN THE LOCATION, MARKING AND PROTECTION OF THEIR FACILITIES. CONTRACTOR IS TO IMMEDIATELY NOTIFY ENGINEER OF APPARENT CONFLICTS OF EXISTING UTILITIES WITH THE PLAN GRADE OR CROSS-SECTIONS OF THE OPEN DITCH. IOWA ONE CALL 1-800-292-8989
6. PIPE/TILE WORK - QUANTITIES ARE ESTIMATED AS SHOWN ON THE PLANS. WORK TO BE DONE AT EACH LOCATION TO BE DETERMINED BY ENGINEER AT THE TIME OF INTAKE REPLACEMENT.
7. WORK SCHEDULE - WORK TO BE COMPLETED BY JUNE 1, 2015.

ISG Architecture Engineering Environmental Planning
www.isg.com
I+S GROUP

THIS DOCUMENT IS THE PROPERTY OF I+S GROUP, INC. AND MAY NOT BE USED, COPIED OR DUPLICATED WITHOUT PRIOR WRITTEN CONSENT.

PROJECT

ORTON SLOUGH DRAINAGE DISTRICT

WOODBURY COUNTY IOWA

REVISION SCHEDULE

NO	DATE	DESCRIPTION

PROJECT NO	13-15118
FILE NAME	15118 A02
DRAWN BY	N. NOWOSIELSKI / FLANSBURG
DESIGNED BY	B. BLOMME
REVIEWED BY	I. CROSBIE/LEE
ISSUE DATE	4/24/15
CLIENT PROJECT NO.	

TITLE

PROPOSED REPAIRS

SHEET

A.02

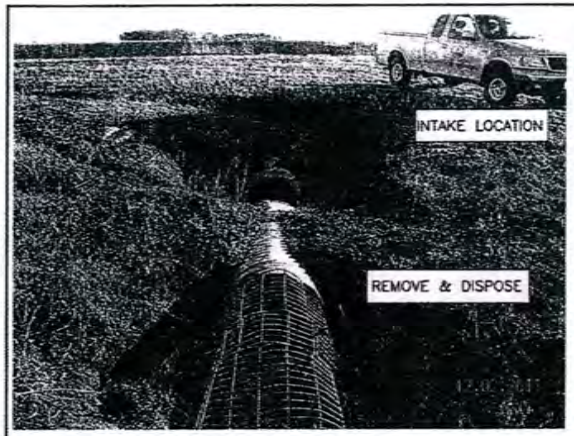

EXISTING CONDITIONS, SITE NO. 1

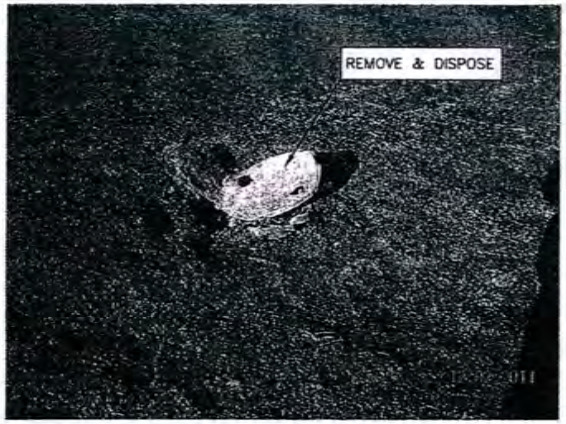

EXISTING CONDITIONS, SITE NO. 2

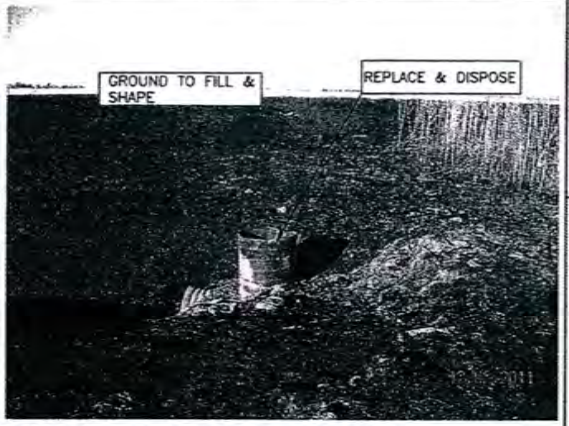

EXISTING CONDITIONS, SITE NO. 3

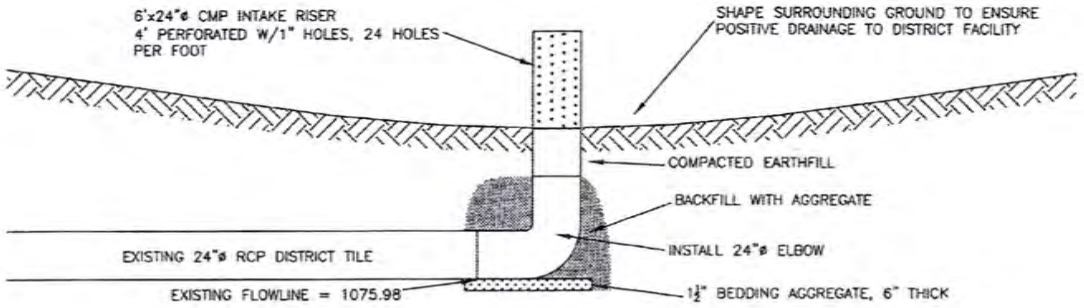

REPAIR SITE NO. 1 - 24" RCP

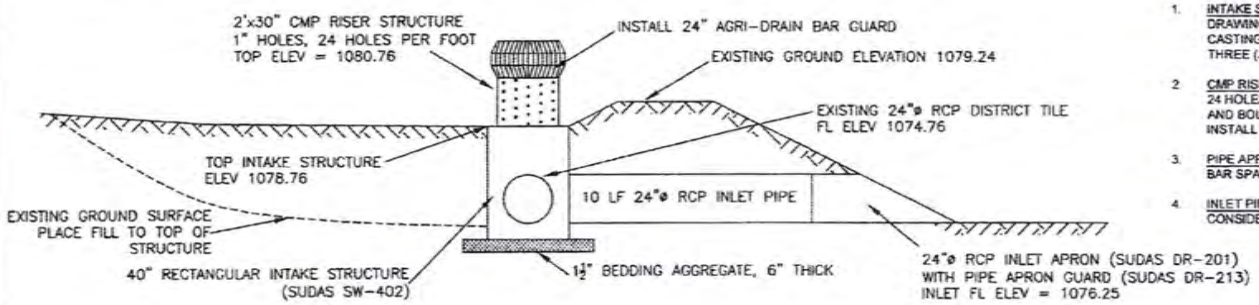

REPAIR SITE NO. 3 - MAIN DROP INTAKE

REPAIR SITE NO. 3 - NOTES

1. INTAKE STRUCTURE BOX - SEE SUDAS SPECIFICATION SW-402 TYPICAL DRAWING. STRUCTURE TO BE 40"x40". NO ADJUSTMENT RINGS OR CASTING (SW-602) ARE REQUIRED. PIPE CONNECTIONS ARE REQUIRED ON THREE (3) SIDES, 6" FROM BOTTOM OF STRUCTURE.
2. CMP RISER STRUCTURE - INSTALL 2'x30" CMP PIPE WITH 1" HOLES DRILLED, 24 HOLES PER FOOT. WELD FOUR (4) ANGLE BRACKET TO BOTTOM OF CMP AND BOLT TO SW-402 LID. ENCASE JOINT IN 4'x12" CONCRETE COLLAR. INSTALL AGRI-DRAIN BAR GUARD IN OPEN END OF RISER.
3. PIPE APRON BAR GUARD - SEE SUDAS SPECIFICATION DR-213. MINIMUM BAR SPACING SHALL BE 4".
4. INLET PIPE - 24" RCP INLET PIPE, PIPE APRON, AND BAR GUARD ARE TO BE CONSIDERED PART OF THE INTAKE STRUCTURE BID ITEM.

ISG Architecture Engineering Environmental Planning
www.isgcorp.com
I+S GROUP

I+S DOCUMENT IS THE PROPERTY OF I+S GROUP, INC. AND MAY NOT BE USED, COPIED OR DUPLICATED WITHOUT PRIOR WRITTEN CONSENT

PROJECT

ORTON SLOUGH DRAINAGE DISTRICT

WOODBURY COUNTY IOWA

REVISION SCHEDULE		
NO	DATE	DESCRIPTION

PROJECT NO.	13-16115
FILE NAME	16115 402 1 1 42X
DRAWN BY	M. WITTROWE, FLAGGER
DESIGNED BY	B. BLOMME
REVIEWED BY	T. SROEBLER
ISSUE DATE	4/24/15
CLIENT PROJECT NO.	

TITLE

TILE INTAKE REPAIRS

SHEET

B.01

APR 30 2015 PM3:42

Loess Hills Alliance

Maintaining the Balance

318 E. Iowa Avenue
Onawa, Iowa 51040
lha@longlines.com
712.433-4645

APR 30 2015 PM3:42

April 27, 2015

Woodbury County Board of Supervisors
Patrick F. Gill, Auditor
620 Douglas
Room 103
Sioux City, IA 51101-1248

Dear Woodbury County Supervisors,

Your check #469519 in the amount of $2,000 was received and the Loess Hills Alliance Board of Directors would like to thank you for your continuing your support of the Alliance. The Alliance works to protect the resources of the Loess Hills, a unique American treasure. The mission of the LHA is to "protect special natural and cultural resources of Iowa's Loess Hills while ensuring economic viability and promoting awareness."

Thank you again for your support of the Loess Hills Alliance.

Sincerely,

Brent Olson
Loess Hills Alliance Treasurer

WOODBURY COUNTY

COMMISSION OF VETERAN AFFAIRS

Agenda

May 5, 2015

4:00 PM

Open Meeting

Approve April 7, 2015 Meeting Minutes as e-mailed.

Approve 3rd Quarter Reports.

Approve April Claims. Total presented for approval today: $6,838.40.

OLD BUSINESS:
Tentative Assistance Changes

NEW BUSINESS:
New Commissioner Recruitment

Veteran #1 – Waterbury Funeral Home Burial Assistance – $1,800.00

GOOD & WELFARE:
Next Meeting – June 2, 2015

Adjourn

Woodbury County Conservation Board

4500 Sioux River Road Sioux City, IA 51109-1657

Phone: 712/258-0838
Fax: 712/258-1261

Board Members:
Cindy Bennett
Suzan Boden
Don Dixon
Mark Taylor, D.O.
Christine Zellmer-Zant

Rick D. Schneider, Director
Mark Peterson, Deputy Director
Dawn Snyder, Education Director

Wednesday, May 6, 2015

MONTHLY MEETING AGENDA – 4:15 P.M.

Dorothy Pecaut Nature Center
4500 Sioux River Road, Sioux City, IA 51109

- **Call to order / roll call** – quorum / open meeting compliance
- **Public comment / input** – this is an opportunity for the public to address any subject pertaining to Conservation Board business.

CONSENT AGENDA

C1. Approve minutes of the April 9, 2015 monthly meeting.

C2. Approve April 2015 claims and expenditures.

C3. Receive and place on file the April 2015 financial / budget report.

C4. Acceptance of Gifts/Donations:
1. Morgan Mahon – Monetary donation ($596) for Barred Owl adoption
2. Ed Walding – Monetary donation ($1,000)
3. Loess Hills Longbeards NWTF Chapter – Monetary donations ($150) for intern fund, ($150) for advertising
4. Siouxland Fly Fishing Club – Monetary donation ($200) for intern fund
5. Larry & Becky Williams – Monetary donation ($100)
6. Bob Moritz Memorial – Monetary donations from 21 donors ($720)

REGULAR AGENDA

R1. Approve consent agenda. (Conservation Board)

R2. FY 15 Equipment Purchase – Review of obligated items and approval of final purchase. (Peterson)

R3. Appointment of Seasonal Park Security Guards as Temporary Peace Officers for summer season: May 22 – September 7, 2015

R4. Capital Improvement Projects Update (Schneider)
1. Stub Gray Shooting Range – Approve use of GetMeRegistered.com website for sale of annual permits
2. Brown's Lake manager's residence
3. Solar power project RFP – Consideration of independent consultant review proposal by Interstates Engineering, Sioux Center, Iowa
4. Southwood cabin development – Authorize site survey

R5. Board member / staff reports – Board members and staff may report on meetings or activities that they have been involved with. (Board and staff)
1. Nature Center activities (Snyder)
2. Park activities (Peterson)
3. Administrative items (Schneider)
    a. Land acquisition updates – Approve order for appraisal
    b. Robert's Rules for small boards

R6. Strategic Planning Session Topics
a. Succession Planning
b. Salary Review
c. Nature Center
d. Capital Improvements
e. Policies/By-Laws/Plans
f. Land Acquisition
g. Other items

R7. Adjournment

CALENDAR OF EVENTS:

1. June Conservation Board meeting, June 4, 2015 – Southwood Conservation Area

YOU ARE INVITED

TO OUR OPEN HOUSE AND RIBBON CUTTING

Orthopedic Institute at Dakota Dunes
317 Dakota Dunes Blvd
Suite G

ORTHOPEDIC INSTITUTE

The One To Trust

PRSRT STD
US POSTAGE
PAID
Permit #1209
Sioux Falls, SD

ORTHOPEDIC INSTITUTE

The One To Trust

Celebrate our Open House and Ribbon Cutting on Tuesday, May 12, 2015 at our new location 4:30 – 6:30 pm

Hors d'oeuvres, wine and beer will be served.

Come tour our new facility and unwind after work.
The OI physicians and staff look forward to meeting you.

For more information, please call 1-888-331-5890.

Orthopedic Institute at Dakota Dunes
317 Dakota Dunes Blvd., Suite G
in strip mall near Cup O' Joy Café/Coffee Shop

Ms. Jaclyn Smith
Woodbury County Board of Supervisors
620 Douglas St Rm 104
Sioux City, IA 51101-1248

51101$1248 C026

WOODBURY COUNTY JAIL WEEKLY POPULATION REPORT AT 0600 HRS.

DATE	Day	DAILY TOTAL	LEC	ELECTRONIC MONITORING	PRAIRIE HILLS	FEDERAL PRISONERS
4/18/15	Saturday	219	192	18	9	14
4/19/15	Sunday	220	193	18	9	14
4/20/15	Monday	208	180	18	10	14
4/21/15	Tuesday	201	173	18	10	15
4/22/15	Wednesday	204	175	18	11	16
4/23/15	Thursday	215	185	19	11	20
4/24/15	Friday	213	184	18	11	18
		1480	1282	127	71	111

24 HOUR DAILY COUNT

DATE	TOTAL	MALE	FEMALE
4/18/15	247	196	51
4/19/15	241	188	53
4/20/15	229	179	50
4/21/15	225	181	44
4/22/15	214	172	42
4/23/15	233	187	46
4/24/15	240	194	46
	1629	1297	332

*Highest population count each day

WOODBURY COUNTY JAIL WEEKLY POPULATION REPORT AT 0600 HRS.

DATE	Day	DAILY TOTAL	LEC	ELECTRONIC MONITORING	PRAIRIE HILLS	FEDERAL PRISONERS
4/25/15	Saturday	220	190	17	13	18
4/26/15	Sunday	221	192	17	12	18
4/27/15	Monday	214	185	17	12	18
4/28/15	Tuesday	213	184	18	11	19
4/29/15	Wednesday	207	178	18	11	19
4/30/15	Thursday	207	180	16	11	20
5/1/15	Friday	190	163	16	11	21
		1472	1272	119	81	133

24 HOUR DAILY COUNT

DATE	TOTAL	MALE	FEMALE
4/25/15	242	204	38
4/26/15	242	197	45
4/27/15	237	196	41
4/28/15	238	194	44
4/29/15	228	186	42
4/30/15	269	227	42
5/1/15	211	166	45
	1667	1370	297

*Highest population count each day