Project Number: L-B(X101)--73-97

Project Development Division

PLANS OF PROPOSED IMPROVEMENT ON THE

SECONDARY ROAD SYSTEM

WOODBURY COUNTY

120' x 30'-6" CCS Bridge

PROJECT NO. L-B(X101)--73-97

FHWA# 350270

Liston Township On 325th Street Sec. 29, T86N, R42W

The Iowa Department of Transportation Standard Specifications for Highway and Bridge Construction, series of 2012, plus current Supplemental Specifications and Special Provisions shall apply to construction work on this project.

Plus Current Special Provisions and Supplemental Specifications

INDEX OF SHEETS

No.	Description
A1	TITLE SHEET
A2	LOCATION MAP
B1	BID ITEMS
B2	BID ITEM REFERENCE INFORMATION
B3	GENERAL NOTES & POLLUTION PREVENTION PLAN
C1	TABULATIONS
C2	DROP INTAKE TRASH RACK DETAILS
C3	SOIL BORING LOGS
D1	PLAN VIEW
D2, D3	PROFILE SHEET
V1	SITUATION PLAN
V2	TOP OF SLAB ELEVATIONS
X1–X10	CROSS SECTIONS

BRIDGE STANDARDS

The following Bridge Standards shall be considered applicable to construction work on this project.

Identification	Date	Identification	Date	Identification	Date
BA–200	10–18–11	EC–201	04–21–15		
BA–201	10–19–10	EW–301	04–19–11		
BA–202	10–21–14	MI–101	10–20–15		
BA–205	10–18–11	TC–252	10–20–15		
BA–250	10–20–15				

ROAD STANDARD PLANS

The following Standard Plans shall be considered applicable to construction work on this project.

Identification	Date	Identification	Date	Identification	Date
P10L	04–13	J30–23–06	05–14	J30–44–06	07–09
J30–01–06	06–13	J30–24–06	07–09	J30–45–06	12–08
J30–12E–06	04–13	J30–34–06	06–13	J30–46–06	09–14
J30–13E–06	07–09	J30–39–06	07–09	J30–47–06	09–14
J30–20–06	06–12	J30–42–06	07–09		
J30–21–06	07–09	J30–43–06	12–08		

TRAFFIC CONTROL PLAN

THIS ROAD WILL BE CLOSED TO THROUGH TRAFFIC DURING CONSTRUCTION. TRAFFIC ROUTES ADJACENT TO PROPERTIES WILL BE MAINTAINED AS PROVIDED FOR IN ARTICLE 1107.08 OF THE CURRENT STANDARD SPECIFICATIONS. TRAFFIC CONTROL DEVICES, PROCEDURES, LAYOUTS, SIGNING, AND PAVEMENT MARKINGS INSTALLED WITHIN THE LIMITS OF THIS PROJECT SHALL CONFORM TO THE "MANUAL OF UNIFORM TRAFFIC CONTROL DEVICES FOR STREETS AND HIGHWAYS" AS ADOPTED BY THE DEPARTMENT PER 761 OF THE IOWA ADMINISTRATION CODE (IAC) CHAPTER 130.

MAINTENANCE OF SIGNS AND BARRICADES AS STATED IN ARTICLE 1107.09 SHALL APPLY ON THIS PROJECT.

SIGNING ON THIS PROJECT SHALL BE THE RESPONSIBILITY OF THE CONTRACTOR AND SHALL BE IN ACCORDANCE WITH ROAD STANDARD TC–252

THIS PROJECT SHALL BE CONSTRUCTED IN ACCORDANACE WITH THE REQUIREMENTS OF U.S. ARMY CORPS OF ENGINEERS NATIONWIDE PERMIT NO. 14. A COPY OF THIS PERMIT IS AVAILIBLE FROM THE WOODBURY COUNTY ENGINEERS OFFICE UPON REQUEST. PERMIT # CEMVR-OD-P-2015-0363

Approved

Board of Supervisors

LICENSED PROFESSIONAL ENGINEER
MARK J. NAHRA
11452
IOWA

I hereby certify that this engineering document was prepared by me or under my direct personal supervision and that I am a duly licensed Professional Engineer under the laws of the State of Iowa.

Mark J. Nahra 6/2/2015
Date

Iowa Registration Number 11452
Expiration Date 12/31/2016

Pages or sheets covered by this seal:
Pages A1, A2, B1, B2, B3, C1, C2, C3, D1, D2, D3, V1, V2 & X1–X10

2011 AADT 20 V.P.D.

WOODBURY COUNTY

CCS BRIDGE REPLACEMENT

PROJECT NO. L-B(X101)--73-97

Letting Date JUNE 23, 2015

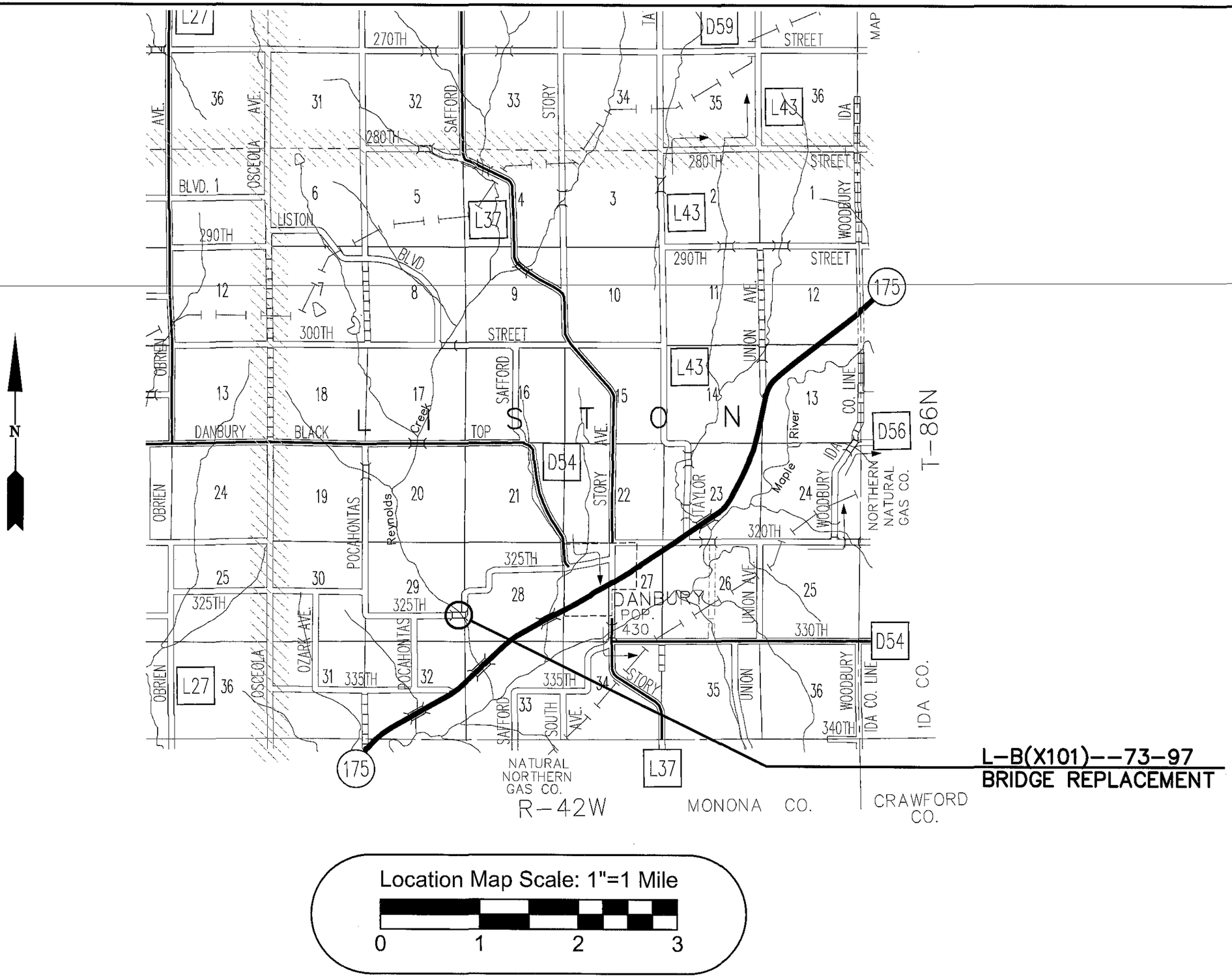

WOODBURY COUNTY
ENGINEERS OFFICE

BSB DRAWN BY:
BK DESIGNED BY:
MJN APPROVED BY:
DATE: REVISION DATE:

PROJECT DESCRIPTION: BRIDGE REPLACEMENT WITH GRADING ON 325TH ST. EAST LINE SEC. 29-T86N-R42W

SHEET DESCRIPTION: LOCATION MAP

PROJECT NO.
L-B(X101)--73-97
SHEET
A2

ESTIMATED QUANTITIES

No.	ITEM CODE	ITEM	UNIT	TOTAL
1.	2101-0850001	CLEARING AND GRUBBING	ACRE	1.05
2.	2102-2710070	EXCAVATION, CLASS 10, ROADWAY AND BORROW	C.Y.	5,122
3.	2104-2710020	EXCAVATION, CLASS 10, CHANNEL	C.Y.	2,410
4.	2401-6745625	REMOVAL OF EXISTING BRIDGE	LUMP SUM	1
5.	2402-2720000	EXCAVATION, CLASS 20	C.Y.	79
6.	2403-0100010	STRUCTURAL CONCRETE (BRIDGE)	C.Y.	293.4
7.	2404-7775000	REINFORCING STEEL	LB.	124
8.	2404-7775005	REINFORCING STEEL, EPOXY COATED	LB.	72,396
9.	2414-6424124	CONCRETE OPEN RAILING, TL-4	LIN. FT.	262
10.	2417-1060048	CULVERT, CORRUGATED METAL ROADWAY PIPE, 48 IN. DIA.	LIN. FT.	38
11.	2501-0201057	PILES, STEEL, HP 10x42	LIN. FT.	780
12.	2501-0201253	PILES, STEEL, HP 12x53	LIN. FT.	1,650
13.	2501-5475053	CONCRETE ENCASEMENT OF STEEL H PILES, HP 12x53 (P10L TYPE 3)	LIN. FT.	539
14.	2501-6335010	PREBORED HOLE	LIN. FT.	120
15.	2505-4008400	STEEL BEAM GUARDRAIL BARRIER TRANSITION SECTION	EACH	3
16.	2505-4021010	STEEL BEAM GUARDRAIL END ANCHOR, BOLTED	EACH	3
17.	2505-4021700	STEEL BEAM GUARDRAIL END TERMINAL	EACH	3
18.	2507-3250005	ENGINEERING FABRIC	S.Y.	1,887
19.	2507-6800061	REVETMENT, CLASS E	TON	2,000
20.	2518-6910000	SAFETY CLOSURE	EACH	2
21.	2519-4200010	REMOVAL AND REINSTALLATION OF FENCE, BARBED WIRE	LIN. FT.	761
22.	2528-8445110	TRAFFIC CONTROL	LUMP SUM	1
23.	2533-4980005	MOBILIZATION	LUMP SUM	1
24.	2551-0000230	PERMANENT CRASH CUSHION, SEVERE USE (SU)	EACH	1
25.	2551-0000300	PERMANENT CRASH CUSHION SPARE PARTS	EACH	1
26.	2599-9999010	TEE-SECTION, CORRUGATED METAL PIPE, 48 IN. DIA. ON 60 IN. DIA.	LUMP SUM	1
27.	2599-9999020	MODIFIED CLASS C GRAVEL	TON	283
28.	2601-2634100	MULCHING	ACRE	1.05
29.	2601-2636043	SEEDING AND FERTILIZING (RURAL)	ACRE	1.05
30.	2602-0000020	SILT FENCE	LIN. FT.	215

SUMMARY OF BRIDGE QUANTITIES

ITEM	UNITS	SUPER STRUCTURE	ABUT. NO. 1 FOOTING	PIER NO. 1	PIER NO. 2	ABUT. NO. 2 FOOTING	TOTALS
EXCAVATION CLASS 20	C.Y.		0			18	18
STRUCTURAL CONCRETE (BRIDGE)	C.Y.	*271.2	11.1			11.1	293.4
REINFORCING STEEL	LBS		62.0			62.0	124.0
REINFORCING STEEL, EPOXY COATED	LBS	69,358	1,519.0			1,519.0	72,396
CONCRETE OPEN RAILING, TL-4	LF	262.0					262.0
HP10x42 STEEL FRICTION PILING	LF		6 AT 65.0 = 390.0			6 AT 65.0 = 390.0	780
HP12x53 STEEL FRICTION PILING	LF			11 AT 75.0 = 825	11 AT 75.0 = 825		1,650
CONCRETE ENCASEMENT OF STEEL "H" PILES, HP 12x53 (P10A TYPE 3)	LF			11 AT 24.5 = 269.5	11 AT 24.5 = 269.5		539
PREBORED HOLES	LF		6 AT 10.0 = 60			6 AT 10.0 = 60	120

* NOTE - INCLUDES ABUTMENT WINGS & PAVING BLOCKS

WOODBURY COUNTY
ENGINEERS OFFICE

DATE: REVISION DATE:

BSB DRAWN BY:
BK DESIGNED BY:
MJN APPROVED BY:

PROJECT DESCRIPTION: BRIDGE REPLACEMENT WITH GRADING ON 325TH ST. EAST LINE SEC. 29-T86N-R42W

SHEET DESCRIPTION: ESTIMATE OF QUANTITIES

PROJECT NO.
L-B(X101)--73-97

SHEET
B1

ESTIMATE REFERENCE INFORMATION

ITEM NO.	DESCRIPTION	DESCRIPTION
1	2101–0850001	**CLEARING AND GRUBBING** ITEM SHALL CONSIST OF REMOVAL OF ALL VEGETATION IN THE CONSTRUCTION LIMITS. ALL MATERIALS SHALL BE DISPOSED OF OFF OF THE PROJECT LIMITS. NO BURNING IS ALLOWED WITH IN THE PROJECT LIMITS, BURNING WILL BE ALLOWED ON PRIVATE PROPERTY ADJACENT TO THE PROJECT WITH THE PERMISSION OF THE LAND OWNER, A LETTER WILL BE REQUIRED FROM THE LANDOWNER ALLOWING THE BURNING NEEDS TO BE ON FILE WITH THE COUNTY ENGINEER.
2	2102–2710070	**EXCAVATION CLASS 10, ROADWAY AND BORROW** TYPE "A" COMPACTION IS REQUIRED. NO PAYMENT FOR OVERHAUL ALLOWED. QUANTITY INCLUDES AN ALLOWANCE OF 40% FOR SHRINKAGE. ITEM INCLUDES MATERIAL REQUIRED FOR GUARDRAIL EMBANKMENTS. ROADWAY SECTIONS SHALL BE COMPACTED USING A VIBRATORY ROLLER. SUMMARY OF EARTH WORK AS FOLLOWS: 5,122 C.Y. (FILL + 40%) 1,001 C.Y. (CUT) 4,121 C.Y. (FILL) TO BE SUPPLIED BY CONTRACTOR.
3	2104–2710020	**EXCAVATION CLASS 10 CHANNEL** QUANTITY OF EXCAVATION EQUALS 2,410 C.Y. OF CUT MATERIAL. EXCESS MATERIAL MAY BE USED AS ROADWAY BORROW IF DEEMED SUITABLE BY THE ENGINEER. UNUSED MATERIAL SHALL BE DISPOSED OF OFF THE PROJECT SITE ACCORDING TO APPLICABLE FEDERAL, STATE AND LOCAL REGULATIONS.
4	2401–6745625	**REMOVAL OF EXISTING BRIDGE** BID ITEM SHALL INCLUDE THE REMOVAL AND DISPOSAL OF THE EXISTING 17'x88' THREE SPAN PONY TRUSS BRIDGE. THE SUBSTRUCTURE SHALL BE REMOVED TO A DEPTH OF 3 FEET BELOW STREAM BED. ALL MATERIALS SHALL BE DISPOSED OF OFF OF THE PROJECT LIMITS ACCORDING TO APPLICABLE FEDERAL, STATE AND LOCAL REGULATIONS. LABORATORY RESULTS SHOW NO TRACES OF ASBESTOS. TEST RESULTS FOR LEAD AND CHROMIUM WERE NEGATIVE.
5	2402–2720000	**EXCAVATION CLASS 20** BID ITEM IS FOR EXCAVATION FOR 48"x38' CMP WITH A DROP INTAKE AND ABUTMENT FOOTINGS, SEE TABULATIONS ON SHEET B1
6	2403–0100010	**STRUCTURAL CONCRETE BRIDGE** INCLUDES THE COST OF FURNISHING AND PLACING SUBDRAIN (INCLUDING EXCAVATION), GRANULAR BACKFILL AND POROUS BACKFILL AT THE ABUTMENTS. CONTRACTOR SHALL SUPPLY CERTIFIED PLANT INSPECTION FOR THIS ITEM AND ITEM 6, 9, & 13. THE COST SHALL BE INCIDENTAL TO THIS ITEM.
7	2404–7775000	**REINFORCING STEEL**
8	2404–7775005	**REINFORCING STEEL, EPOXY COATED**
9	2414–6424124	**CONCRETE OPEN RAILING, TL–4**
10	2417–1060048	**CULVERT, CORRUGATED METAL ROADWAY PIPE, 48 IN. DIA.** THE CULVERT SHALL BE INSTALLED AT STATION 14+56.2 97.40' RT. . THE L.F. OF CULVERT IS CALCULATED BEGINNING AT THE END OF THE TWO (2) FOOT EXTENSION ON THE DROP INLET. THE CULVERT SHALL BE RIVETED AND 12 GAUGE.
11	2501–0201057	**PILES, STEEL, HP 10 X 42**
12	2501–0201253	**PILES, STEEL, HP 12 X 53**
13	2501–5475053	**CONCRETE ENCASEMENT, STEEL HP 12X53 (PL10L) TYPE 3** SEE TABULATIONS ON SHEET B1
14	2501–6335010	**PREBORED HOLES** SEE TABULATIONS ON SHEET B1
15	2504–408400	**STEEL BEAM GUARDRAIL BARRIER TRANSITION SECTION** SEE TABULATIONS ON SHEET C1

ESTIMATE REFERENCE INFORMATION

ITEM NO.	DESCRIPTION	DESCRIPTION
16	2505–4021010	**STEEL BEAM GUARDRAIL END ANCHOR BOLTED** SEE TABULATION ON C1
17	2505–4021700	**STEEL BEAM GUARDRAIL END TERMINAL** SEE TABULATION ON C1
18	2507–3250005	**ENGINEERING FABRIC** FABRIC SHALL BE PLACED UNDER AND AT THE LIMITS OF THE REVETMENT.
19	2507–6800061	**REVETMENT CLASS E** SEE SHEET D1 FOR PLACEMENT LIMITS
20	2518–6910000	**SAFETY CLOSURE** THIS ITEM INCLUDES PROVIDING, MAINTAINING AND REMOVING SAFETY FENCES SEE SHEET C1 FOR LOCATIONS.
21	2519–4200010	**REMOVAL AND REINSTALLATION OF FENCE, 4 STRAND BARB** SEE TABULATIONS ON SHEET C1
22	2528–8445110	**TRAFFIC CONTROL**
23	2533–4980005	**MOBILIZATION**
24	2551–0000230	**PERMANENT CRASH CUSHION, SEVERE USE (SU)** SEE TABULATION ON C1 FOR LOCATION & DETAILS. SEE MATERIALS IM 455 FOR ACCEPTABLE PERMANENT CRASH CUSHION SOURCES AND BRAND NAMES. SUBMITTAL REQUIREMENT ARE DESCRIBED. INSTALLATION OF PERMANENT CRASH CUSHIONS MUST BE COORDINATED WITH THE BRIDGE END POST CONSTRUCTION PRIOR TO COMMENCEMENT OF PROJECT CONSTRUCTION.
25	2551–0000230	**PERMANENT CRASH CUSHION SPARE PARTS** SEE MATERIAL IM455, APPENDIX A, FOR PARTS TO BE INCLUDED IN SPARE PARTS KIT
26	2599–9999010	**TEE–SECTION, CORRUGATED METAL PIPE, 48 IN. ON 60 IN. DIA.** THIS ITEM SHALL INCLUDE FURNISHING AND INSTALLING THE 60" DIAMETER DROP INLET WITH A 48" DIAMETER BY 2' EXTENSION AT STATION 14+56.2 97.40' RT. DROP INLET IS ILLUSTRATED ON SHEET D1. INSTALLATION SHALL INCLUDE 2.51 CU. YDS. OF C-4 CONCRETE TO BE USED AS BALLAST. THE CONCRETE IS INCIDENTAL TO THE LUMP SUM COST FOR THIS ITEM. DROP INLET SHALL BE RIVETED AND 12 GAUGE. INCIDENTAL TO THIS BID ITEM IS THE CONSTRUCTION AND PLACEMENT OF THE TRASH RACK AS ILLUSTRATED ON SHEET C2. THE TRASH RACK MAY BE FIELD WELDED INSTEAD OF BOLTS AT THE CONTRACTORS DISCRETION. IF FIELD WELDED STEEL WILL BE PAINTED IF BOLTED ALL MATERIAL TO BE GALVANIZED.
27	2599–9999920	**MODIFIED CLASS C GRAVEL** THIS ITEM IS FOR FURNISHING AND PLACING GRAVEL WITH THE FOLLOWING GRADATION: 3/4" 80-90% PASSING #4 50-65% PASSING #8 35-50% PASSING #30 10-30% PASSING GRAVEL SHALL BE PLACED IN TWO LIFTS OF 2 INCHES. THE FIRST LIFT SHALL BE SCARIFIED INTO THE ROADWAY AND COMPACTED WITH A VIBRATORY SMOOTH ROLLER. THE ROADWAY SHALL BE BLADED BEFORE ADDING THE FINAL 2 INCHES. THE ROADWAY SHALL BE BLADED TO CORRECT THE SURFACE AFTER THE FINAL 2 INCH LIFT OF GRAVEL IS PLACED.
28	2601–2634100	**MULCHING** MULCHING AS PER I.D.O.T. STANDARD SPECIFICATION 2601.03 E.
29	2601–2636043	**SEEDING AND FERTILIZING (RURAL)** THIS ITEM IS FOR FURNISHING AND PLACING PERMANENT SEED AS PER TABLE 2601.03-1 AND SECTION 2601-03 B OF THE I.D.O.T. STANDARD SPECIFICATIONS.
30	2602–0000020	**SILT FENCE** SEE TABULATION ON C1

WOODBURY COUNTY
ENGINEERS OFFICE

BSB DRAWN BY:
BK DESIGNED BY:
MJN APPROVED BY:
DATE: REVISION DATE:

PROJECT DESCRIPTION: BRIDGE REPLACEMENT WITH GRADING ON 325TH ST. EAST LINE SEC. 29-T86N-R42W

SHEET DESCRIPTION: ESTIMATE REFERENCE INFORMATION

PROJECT NO.
L-B(X101) --73-97

SHEET
B2

GENERAL NOTES:

CONTRACTOR SHALL CONFINE WORK TO THE COUNTY R.O.W. AND TEMPORARY EASEMENT UNLESS PERMISSION FROM RESPECTIVE LANDOWNERS IS PROVIDED TO THE COUNTY IN WRITING.

THE ENGINEER MAKES NO GUARANTEE THAT THE UTILITIES SHOWN COMPRISE ALL SUCH UTILITIES IN THE AREA, EITHER IN SERVICE OR ABANDONED. THE ENGINEER FURTHER DOES NOT WARRANT THAT THE UTILITIES SHOWN ARE IN THE EXACT LOCATION INDICATED. PRIOR TO COMMENCING WORK. THE CONTRACTOR SHALL CONTACT IOWA ONE-CALL AT 1-800-292-8989 FOR UTILITY RELOCATES. THE CONTRACTOR SHALL NOTIFY ALL UTILITY COMPANIES (PUBLIC AND PRIVATE) AT LEAST 20 DAYS IN ADVANCE OF THE ACTUAL STARTING DATE OF CONSTRUCTION. THE CONTRACTOR IS TO DETERMINE ACTUAL LOCATION OF UTILITIES IN THE FIELD. THE CONTRACTOR IS TO USE DUE CAUTION IN WORKING OVER AND AROUND ALL UTILITY LINES. BREAKS IN THE UTILITY LINES DUE TO THE CONTRACTOR ARE TO BE REPAIRED OR REPLACED WITHOUT COST TO THE OWNER OR ENGINEER.

OTHER EXISTING UNDERGROUND INSTALLATIONS AND STRUCTURES ARE INDICATED ON THE DRAWINGS ACCORDING TO THE INFORMATION FURNISHED TO THE ENGINEER BY OTHERS. THE ENGINEER DOES NOT GUARANTEE THE ACCURACY OF SUCH INFORMATION. THE CONTRACTOR SHALL MAKE EVERY EFFORT TO LOCATE ALL EXISTING UNDERGROUND INSTALLATIONS AND STRUCTURES IN THE VICINITY OF THE WORK TO BE DONE BY PROSPECTING IN ADVANCE OF EXCAVATION.

ALL RUBBLE FROM THE REMOVAL OF EXISTING STRUCTURE SHALL BE DISPOSED OF BY THE CONTRACTOR IN COMPLIANCE WITH APPLICABLE FEDERAL, STATE AND LOCAL REQUIREMENTS.
RUBBLE SHALL BE REMOVED FROM THE PROJECT SITE.

SOUNDING AND TEST BORING DATA SHOWN ON THE PLANS WERE ACCUMULATED FOR DESIGNING AND ESTIMATING PURPOSES. THEIR APPEARANCE ON THE PLANS DOES NOT CONSTITUTE A GUARANTEE THAT CONDITIONS OTHER THAN THOSE INDICATED WILL NOT BE ENCOUNTERED.

MINIMUM CLEAR DISTANCE FROM THE EDGE OF REINFORCING BAR TO FACE OF CONCRETE SHALL BE 2 INCHES UNLESS OTHERWISE NOTED OR SHOWN.

THE CONTRACT LENGTH OF 65 FEET FOR THE WEST AND EAST ABUTMENT PILES AND 75 FEET FOR THE WEST AND EAST PIER PILES, IS BASED ON A MIXED SOIL CLASSIFICATION, A TOTAL FACTORED AXIAL LOAD PER PILE (PU) OF 87 KIPS FOR THE ABUTMENT AND 95 KIPS FOR THE PIERS, AND A GEOTECHNICAL RESISTANCE FACTOR (PHI) OF 0.65.

CONTRACTOR SHALL PROVIDE THE COUNTY AND 911 OPERATOR WITH THE NAME AND PHONE NUMBER OF THEIR REPRESENTATIVE TO BE CONTACTED DURING WORKING AND NON-WORKING HOURS AS NECESSARY.

POLLUTION PREVENTION PLAN

This Base Pollution Prevention Plan (PPP) includes information on Roles and Responsibilities, Project Site Description, Controls, Maintenance Procedures, Inspection Requirements, Non-Storm Water Controls, Potential Sources of Off-Right-of-Way Pollution, & Definitions. This PPP references other documents rather than repeating the information contained in the documents. A copy of this PPP, amended as needed per plan revisions or by contract modifications, will be readily available for review. All contractors shall conduct their operations in a manner that controls pollutants, minimizes erosion, & prevents sediments from entering waters of the state & leaving the highway right of way. The prime contractor shall be responsible for compliance and implementation of the PPP for the entire contract. This responsibility shall be further shared with subcontractors whose work is a source of potential pollution as defined in this PPP.

I. ROLES & RESPONSIBILITIES
- A. Designer:
  - Prepares Base PPP included in the project plan.
  - Prepares Notice of Intent (NOI) submitted to Iowa DNR.
  - Signature authority on the Base PPP and NOI.
- B. Contractor/Subcontractor:
  1. Affected contractors/subcontractors are co-permittees with the IDOT & will sign a certification statement adhering to the requirements of the NPDES Permit & this plan. All co-permittees are legally required under the Clean Water Act & the Iowa Administrative Code to ensure compliance with the terms & conditions of this PPP.
  2. Submit a detailed schedule according to Article 2602 of the Specification & any additional plan notes.
  3. Install & maintain appropriate controls.
  4. Supervise & implement good housekeeping practices.
  5. Conduct joint required inspections of the site with inspection staff.
  6. Signature authority on Co-Permittee Certification statements & storm water inspection reports.
- C. Inspector
  1. Update PPP whenever there is a change in design, construction, operation or maintenance, which has a significant effect on the discharge of pollutants from the project.
  2. Maintain an up-to-date list that identifies contractors & subcontractors as co-permittees.
  3. Make these plans available to the DNR upon their request.
  4. Conduct joint required inspections of the site with the contractor/subcontractor.
  5. Complete an inspection report after each inspection.
  6. Signature authority on storm water inspection reports & Notice of Discontinuation(NOD).

II. Project Site Description
- A. This PPP is for construction of a 120'x30' Continuos Concrete Slab Bridge.
- B. This PPP covers approximately 1.05 acres with an estimated 1.05 acres being disturbed.
- C. The PPP is located in an area of 1 soil association (Woodbury-Monona). The estimated average SCS runoff curve number for this PPP after completion will be 0.75.
- D. Storm Water Site Map – Multiple sources of information comprise the base storm water site map including:
  1. Drainage patterns – Plan & Profile sheets & Situation Plans.
  2. Proposed Slopes – Cross Sections.
  3. Areas of Soil Disturbance – Construction limits shown on Plan & Profile sheets.
  4. Location of Structural Controls – Tabulation on Plan Sheets.
  5. Location of Non-Structural Controls – Tabulation on Plan Sheets.
  6. Location of Stabilization Practices – Generally within construction limits shown on Plan & Profile sheets.
  7. Surface Waters (including wetlands) – Plan & Profile sheets.
  8. Locations where storm water is discharged – Plan & Profile sheets.
- E. The base site map is amended by contract modifications & progress payments of completed erosion control work.
- F. Runoff from this work will flow into Bacon Creek.

III. CONTROLS

A. The contractor's work plan & sequence of operations specified in Article 2602.03 for accomplishment of storm water controls should clearly describe the intended sequence of major activities & for each activity define the control measure & the timing during the construction process that the measure will be implemented.

B. Preserve vegetation in areas not needed for construction.

C. Section 2601 & 2602 of the Standard Specifications define requirements to implement erosion & sediment control measures. Actual quantities used may vary from the Base PPP & amendment of the plan will be documented via field book entries or by contract modification. Additional erosion & sediment control items may be required as determined by the inspector &/or contractor during storm water monitoring inspections. If the work involved is not applicable to any contract items, the work will be paid for according to Article 1109.03 paragraph B.

1. EROSION & SEDIMENT CONTROLS
   - A. Stabilization Practices
     - 1) Site plans will ensure that existing vegetation is preserved where attainable & disturbed portions of the site will be stabilized.
     - 2) Stabilization measures shall be initiated as soon as practicable in portions of the site where construction activities have temporarily or permanently ceased.
     - 3) Temporary stabilizing seeding shall be completed as the disturbed areas are constructed. If construction activity is not planned to occur in a disturbed area for at least 21 days, the area shall be stabilized by temporary seeding or mulching within 14 days. Other stabilizing methods shall be used outside the seeding time period.
     - 4) Stabilization measures to be used for this project are located in the Estimated Project Quantities (2) & Estimate Reference Information (2) of the plan. Additional items may be found in the Inspector's Daily Reports.
   - B. Structural Practices
     - 1) Structural practices will be implemented to divert flows from exposed soils & detain or otherwise limit runoff & the discharge of pollutants from exposed areas of the site.
     - 2) Structural items to be used for this project are located in the Estimated Project Quantities (2) & Estimate Reference Information (2) of the plan, as well as all other item specific Tabulations. Typical drawings detailing construction of the devices to be used on this project can be found on the plan or are referenced in the Standard Road Plans Tabulation.
   - C. Storm Water Management
     - 1) Measures shall be installed during the construction process to control pollutants in storm water discharges that will occur after construction operations have been completed. The installation of these devices may be subject to Section 404 of the Clean Water Act.
2. OTHER CONTROLS
   - A. Contractor disposal of unused construction materials & construction material wastes shall comply with applicable state & local waste disposal, sanitary sewer, or septic system regulations. In the event of a conflict with other governmental laws, rules & regulations, the more restrictive laws, rules or regulations shall apply.
     - 1) Vehicle Entrances & Exits – Construct & maintain entrances & exits to prevent tracking of sediments onto roadways.
     - 2) Material Delivery, Storage & Use – Implement practices to prevent discharge of construction materials during delivery, storage, & use.
     - 3) Stockpile Management – Install controls to reduce or eliminate pollution of storm water from stockpiles of soil & paving.
     - 4) Waste Disposal – Do not discharge any materials, including building materials, into waters of the state, except as authorized by a Section 404 permit.
     - 5) Spill Prevention & Control – Implement procedures to contain & clean-up spills & prevent material discharges to the storm drain system & waters of the state.
     - 6) Concrete Residuals & Washout Wastes – Designate temporary concrete washout facilities for rinsing out concrete trucks. Provide directions to truck drivers where designated washout facilities are located.
     - 7) Vehicle & Equipment Cleaning – Employ washing practices that prevent contamination of surface & ground water from wash water.
     - 8) Vehicle & Equipment Fueling & Maintenance – Perform on site fueling & maintenance in accordance with all environmental laws such as proper storage of inside fuels & proper disposal of used engine oil or other fluids on site.
     - 9) Litter Management – Ensure employees properly dispose of litter.
3. APPROVED STATE OR LOCAL PLANS
   - A. During the course of this construction, it is possible that situations will arise where unknown materials will be encountered. When such situations are encountered, they will be handled according to the federal, state, & local regulations in effect at the time.

IV. MAINTENANCE PROCEDURES

A. The contractor is required to maintain all temporary erosion & sediment control measures in proper working order, including cleaning, repairing, or replacing them throughout the contract period. This shall begin when the features have lost 50% of their capacity.

V. INSPECTION REQUIREMENTS

A. Inspections shall be made jointly by the contractor & the contracting authority at least once every 7 calendar days. Storm water monitoring inspections will include:
- 1) Date of inspection.
- 2) Summary of the scope of the inspection.
- 3) Name & qualifications of the personnel making the inspection.
- 4) Rainfall amount.
- 5) Review erosion & sediment control measures within disturbed areas for the effectiveness in preventing impacts to receiving waters.
- 6) Major observations related to the implementation of the PPP.
- 7) Identify corrective actions required to maintain or modify erosion & sediment control measures.

B. Include storm water monitoring inspection reports in the Amended PPP. Incorporate any additional erosion & sediment control measures determined as a result of the inspection. Immediately begin corrective actions on all deficiencies found & complete all actions within 3 calendar days of the inspection.

VI. NON-STORM WATER DISCHARGES

A. This includes subsurface drains(i.e. longitudinal & standard subdrains) & slope drains. The velocity of the discharge from these features may be controlled by the use of patio blocks, Class A stone, erosion stone or other appropriate materials.

VII. POTENTIAL SOURCES OF OFF RIGHT-OF-WAY (ROW) POLLUTION

A. Silts, sediment, & other forms of pollutants may be transported onto highway right-of-way (ROW) as a result of a storm event. Potential sources of pollution located outside highway ROW are beyond the control of this PPP. Pollution within highway ROW will be conveyed & controlled per this PPP.

VIII. DEFINTIONS
- A. Base PPP – Initial Pollution Prevention Plan
- B. Amended PPP– May include Plan Revisions or Contract Modifications for new items & field book entries made by the inspector.
- C. IDR– Inspector's Daily Report – this contains the inspector's daily diary & item postings.
- D. Controls – Methods, practices, or measures to minimize or prevent erosion, control sedimentation, control storm water, or minimize contaminants from other types of waste or materials.
- E. Signature Authority – Representative from Designer, Contractor/Subcontractor, or Inspector authorized to sign various storm water documents.

WOODBURY COUNTY
ENGINEERS OFFICE

BSB DRAWN BY:
BK DESIGNED BY:
MJN APPROVED BY:
DATE: REVISION DATE:

PROJECT DESCRIPTION: BRIDGE REPLACEMENT WITH GRADING ON 325TH ST. EAST LINE SEC. 29-T86N-R42W

SHEET DESCRIPTION: GENERAL NOTES & POLLUTION PREVENTION PLAN

PROJECT NO.
L-B(X101)-73-97

SHEET
B3

STEEL BEAM GUARDRAIL AT CONCRETE BARRIER OR BRIDGE END POST

Refer to BA-200, BA-201, BA-202, BA-205, BA-250, SI-172, SI-173 and SI-211.

108-8A
10-19-10

Location			Layout Lengths					Delineators and Object Markers				Bid Items ①						① See Standards for list of materials.
			(VT1)	(VF)	(VT2)	(ET) Terminal	Type	Delineator Type 1	Object Marker Type 2	Object Marker Type 3		End Anchor Bolted	Barrier Transition Section	Steel Beam Guardrail	End Terminal Standard	End Terminal Flared for Cable Connection	Adapter	
								White		OM-3L	OM-3R	BA-202	BA-201	BA-200	BA-205	BA-206	BA-210	
No.	Station	Offset	Lin. Ft.	Lin. Ft.	Lin. Ft.	Lin. Ft.		No.	No.	No.	No.	Type	No.	Lin. Ft.	No.	No.	No.	Remarks
1	13+39.21	15.62' LT.	56.2	–	–	100.0	2	–	2.0	2		A	2	–	2.0	–	–	Standard Terminal
2	13+39.21	15.62' RT.	28.1	–	–	50.0	2	–	1.0		2	A	1	–	1.0	–	–	Standard Terminal
3																		
4																		

CRASH CUSHIONS

* Bid Item

108-30
04-16-13

No.	① Direction of Traffic	Location Station	Side	Obstacle Width ③	Bid Item(s) Crash Cushion (select One)					Sand Barrel Details ②					Earthwork*		Spare Parts Kit		Remarks
					Temporary	Temporary Redirective	Temporary Severe Use	Permanent	Permanent Severe Use	Ⓥ Length	Ⓦ Length	Ⓧ Length	Ⓨ Length	Ⓩ Length	Excavation Class 10	Embankment In Place	Permanent	Permanent Severe Use	
				Feet						Feet	Feet	Feet	Feet	Feet	Cu.Yds.	Cu.Yds.	Each	Each	
1	NB	13+99	RT	1'-1"					1						2.3			1	SEE MATLS. IM 455

① Lane(s) to which the installation is adjacent.
② Spare parts kit to be included with each permanent crash cushion.
③ Obstacle is J30 Open Barrier Rail End Post, TL-4, J30-43-06

TABULATION OF SILT FENCES

Refer to EC-201

100-17
04-20-10

Location Station	Station	Side	Length (Lin. Ft.)	Remarks
13+85	16+00	LT.	215	

TABULATION OF SAFETY CLOSURES

108-13A
10-28-97

Refer to Section 2518 of the Standard Specifications

Station	Closure Type Road Quantity	Closure Type Hazard Quantity	Remarks
9+50	1.0		
18+00	1.0		
Totals	2.0		

TABULATION OF FENCING

Location Station	Station	Side	Length (Lin. Ft.)	Remarks
10+45	13+11	RIGHT	266	2 BRACE POSTS
11+00	12+65	LEFT	165	2 BRACE POSTS
14+00	17+30	RIGHT	330	2 BRACE POSTS
		RIGHT		
		TOTAL	761	

WOODBURY COUNTY
ENGINEERS OFFICE

BSB DRAWN BY:
BK DESIGNED BY:
MJN APPROVED BY:
DATE: REVISION DATE:

PROJECT DESCRIPTION: BRIDGE REPLACEMENT WITH GRADING ON 325TH ST. EAST LINE SEC. 29-T86N-R42W

SHEET DESCRIPTION: TABULATIONS

PROJECT NO.
L-B(X101)--73-97

SHEET
C1

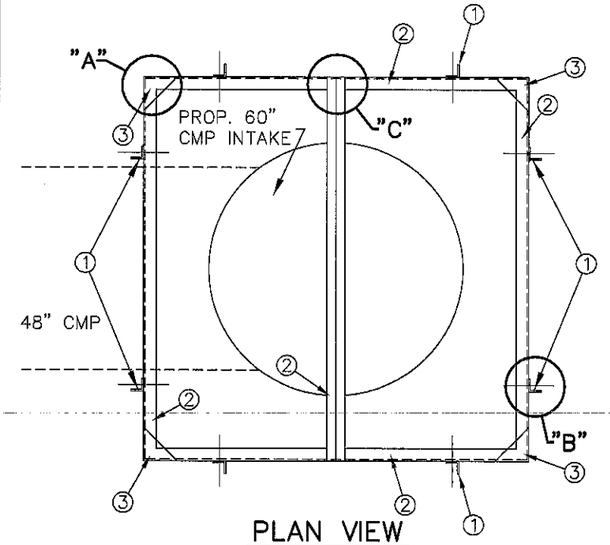

PLAN VIEW

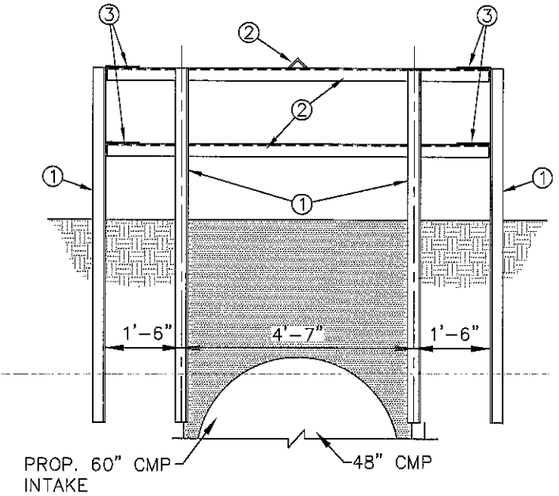

SIDE AND END ELEVATION

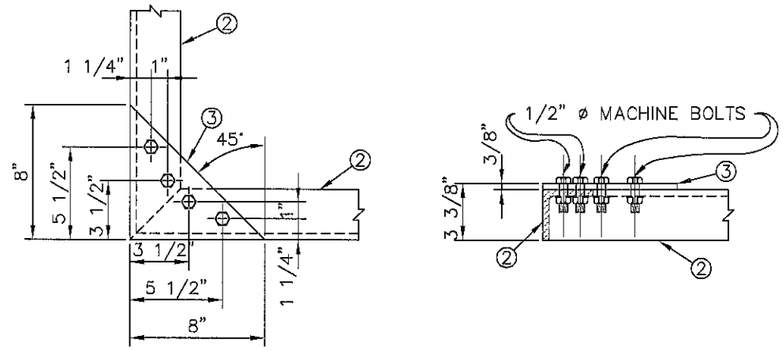

PLAN END ELEV.

VIEW "A"–GUSSET PLATE DETAILS

0 1 FT.
SCALE

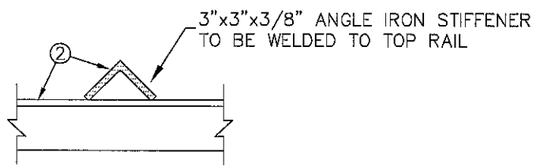

VIEW "C"

0 1 FT.
SCALE

CONSTRUCTION NOTES

TRASH RACK TO BE FABRICATED OF 3"x3"x3/8" STEEL ANGLES BOLTED TOGETHER WITH 1/2" ø MACHINE BOLTS. ALL HOLES FOR BOLTS SHALL BE 1/16" LARGER THAN BOLT DIAMETER.

ALL CUTS SHALL BE SAW CUTS.

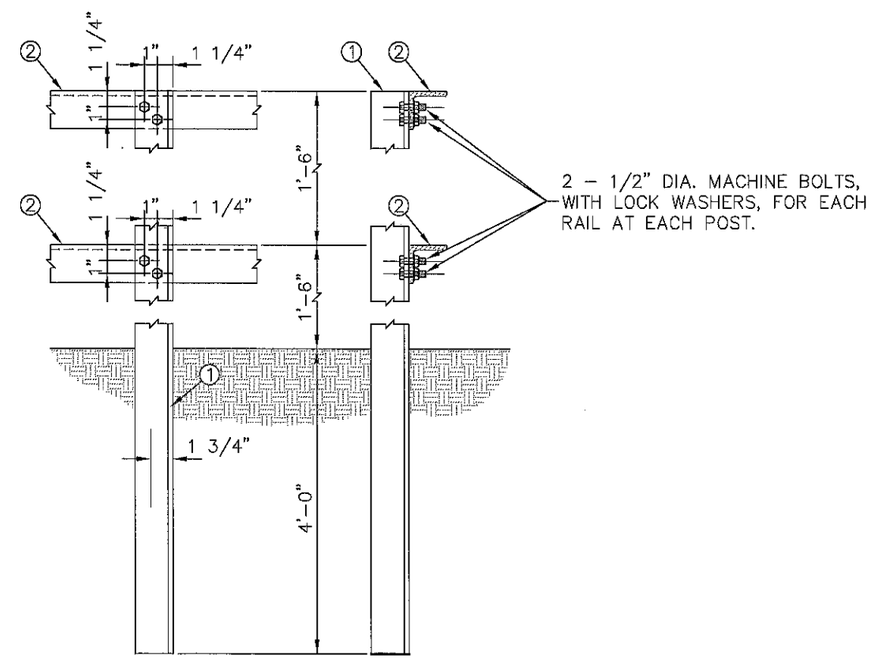

FRONT ELEV. SIDE ELEV.

VIEW "B"

0 1 FT.
SCALE

BILL OF MATERIALS FOR TRASH RACK

MARK	QUAN.	ITEM	LENGTH
1	8	3"x3"x3/8" ANGLE IRON	7'-0"
2	9	3"x3"x3/8" ANGLE IRON	7'-7"
3	8	⊿8"x8"x3/8" GUSSET PLATE	–
–	64	1/2" ø MACH. BOLTS W/LOCK WASHERS	1 3/4"

WOODBURY COUNTY
ENGINEERS OFFICE

DATE: REVISION DATE:

BSB DRAWN BY:
BK DESIGNED BY:
MJN APPROVED BY:

PROJECT DESCRIPTION: BRIDGE REPLACEMENT WITH GRADING ON 325TH ST. EAST LINE SEC. 29-T86N-R42W

SHEET DESCRIPTION: DROP INTAKE TRASH RACK DETAILS

PROJECT NO.
L-B(X101)--73-97
SHEET
C2

LOG OF EXPLORATORY BORING

Sheet 1 of 1

Job Number: G4389
Project: Bridge X-101
Date Started: 5/19/15
Date Completed: 5/19/15

Boring No.: B-1
Boring Location: Woodbury County, IA
Drill Type: Hollow Stem
Ground Elev.: 1149.9

Shelby Tube; Standard Split Spoon; Water Level ATD; Modified California; Grab Sample; Water Level After 24-Hours

Depth in Feet	SOIL DESCRIPTION	USCS	Blow Counts SPT (N) Blows/Foot
	12-Inch Root Zone		
	STIFF SILTY CLAY, Medium Brown	CL	1-3-3 N= 6
5	SOFT SILTY CLAY, Dark Brown	CL	2-1-2 N= 3
10	FIRM SILTY CLAY, Gray Brown	CL	1-3-4 N= 7
15	(Grayish Yellow Brown)		3-8-7 N= 15
20	STIFF SILTY CLAY, Medium Yellow Brown	CL	2-3-3 N= 6
25	SILTY SAND, Gray Brown	SM	1-3-3 N= 6
30	FINE SAND, Grayish Yellow Brown	SP	7-8-8 N= 16
35	GRAVELLY SAND, Grayish Yellow Brown	SP	3-17-19 N= 36
40	FINE SAND, Grayish Yellow Brown	SP	6-10-11 N= 21
45	VERY FIRM GLACIAL CLAY, Light Gray, Oxidized	CL	7-8-9 N= 17
50	(Dark Gray)		5-9-8 N= 17
55			4-8-9 N= 17
60			5-8-9 N= 17
65			4-11-11 N= 22
70			3-8-10 N= 18
75			4-10-12 N= 22
80			4-8-9 N= 17
85			5-11-11 N= 22
90			6-10-11 N= 21
95	COHESIVE MATERIAL, Medium Gray	ML	9-19-37 N= 56

END OF BORING AT 95 FEET DUE TO AUGER REFUSAL IN SILTSTONE SHALE
FREE WATER WAS ENCOUNTERED AT 25.5 FEET AT TIME OF DRILLING AND WAS ENCOUNTERED AT 19.2 FEET 24 HOURS AFTER DRILLING

Moisture Content, %; Dry Density (PCF); % Saturation; Hand Penetrometer (TSF); Unconfined Comp. Strength (TSF); Liquid Limit %; Plastic Limit %; Plasticity Index %; Resistivity Ohm-M

LOG OF BORING G4389.GPJ CERTIFIED TESTING.GDT 5/21/15

LOG OF EXPLORATORY BORING

Sheet 1 of 1

Job Number: G4389
Project: Bridge X-101
Date Started: 5/18/15
Date Completed: 5/18/15

Boring No.: B-2
Boring Location: Woodbury County, IA
Drill Type: Hollow Stem
Ground Elev.: 1149.1

Shelby Tube; Standard Split Spoon; Water Level ATD; Modified California; Grab Sample; Water Level After 24-Hours

Depth in Feet	SOIL DESCRIPTION	USCS	Blow Counts SPT (N) Blows/Foot
	6-Inch Root Zone		4-3-3 N= 6
	STIFF SILTY CLAY, Medium Brown, Fill		3-1-2 N= 3
5	SOFT SILTY CLAY, Dark Brown	CL	1-3-3 N= 6
10	STIFF SILTY CLAY, Dark Gray Brown	CL	2-3-3 N= 6
15			1-3-4 N= 7
20	(Sand Lenses)		6-9-12 N= 21
25	COARSE SAND, Medium Brown	SP	4-5-5 N= 10
30	FINE SAND, Gray Brown	SP	11-18-18 N= 36
35	COARSE SAND, Grayish Yellow Brown	SP	7-5-6 N= 11
40	FIRM - VERY FIRM GLACIAL CLAY, Light Gray Brown	CL	7-7-7 N= 14
45	(Dark Gray)		5-9-8 N= 17
50			4-7-8 N= 15
55			3-7-7 N= 14
60			4-9-10 N= 19
65	VERY FIRM GLACIAL CLAY, Dark Gray	CL	4-7-8 N= 15
70	FIRM - VERY FIRM GLACIAL CLAY, Light Gray Brown	CL	4-9-10 N= 19
75	VERY FIRM GLACIAL CLAY, Dark Gray	CL	4-10-13 N= 23
80	(Light Gray)		10-16-19 N= 35
85			5-12-13 N= 25
90			6-28-50 N= 78
95	COHESIVE MATERIAL, Light Gray	ML	

END OF BORING AT 95 FEET DUE TO AUGER REFUSAL IN SILTSTONE SHALE
FREE WATER WAS ENCOUNTERED AT 20 FEET AT TIME OF DRILLING AND WAS ENCOUNTERED AT 18.5 FEET 24 HOURS AFTER DRILLING

Moisture Content, %; Dry Density (PCF); % Saturation; Hand Penetrometer (TSF); Unconfined Comp. Strength (TSF); Liquid Limit %; Plastic Limit %; Plasticity Index %; Resistivity Ohm-M

LOG OF BORING G4389.GPJ CERTIFIED TESTING.GDT 5/21/15

WOODBURY COUNTY
ENGINEERS OFFICE

BSB DRAWN BY:
BK DESIGNED BY:
MJN APPROVED BY:
DATE: REVISION DATE:

PROJECT DESCRIPTION: BRIDGE REPLACEMENT WITH GRADING ON 325TH ST. EAST LINE SEC. 29-T86N-R42W

SHEET DESCRIPTION: SOIL BORING LOGS

PROJECT NO.
L-B(X101)--73-97
SHEET
C3

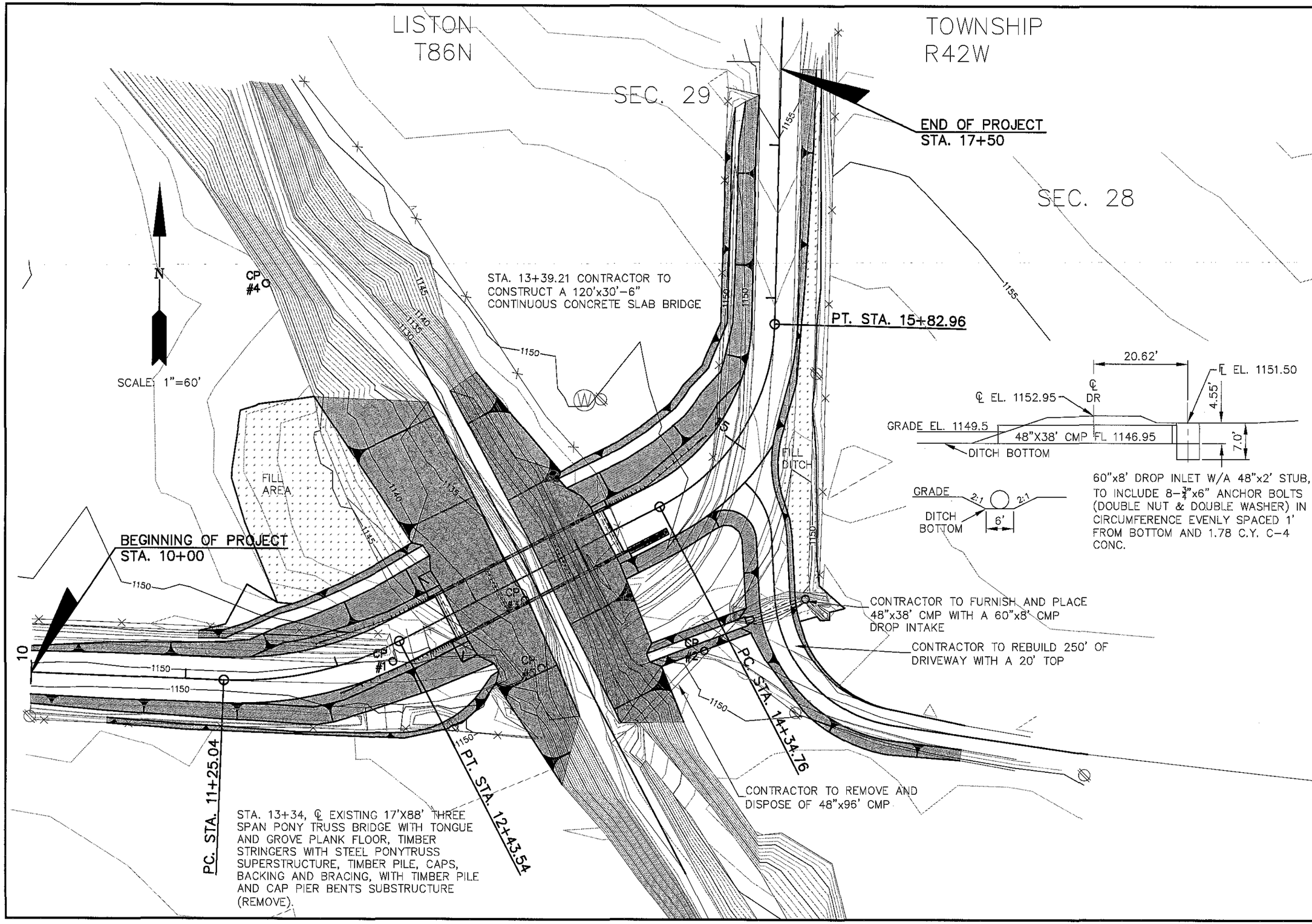

WOODBURY COUNTY
ENGINEERS OFFICE

BSB	DRAWN BY:
BK	DESIGNED BY:
MJN	APPROVED BY:
DATE:	REVISION DATE:

PROJECT DESCRIPTION: BRIDGE REPLACEMENT WITH GRADING ON 325TH ST. EAST LINE SEC. 29-T86N-R42W

SHEET DESCRIPTION: PLAN VIEW

PROJECT NO.
L-B(X101)--73-97
SHEET
D1

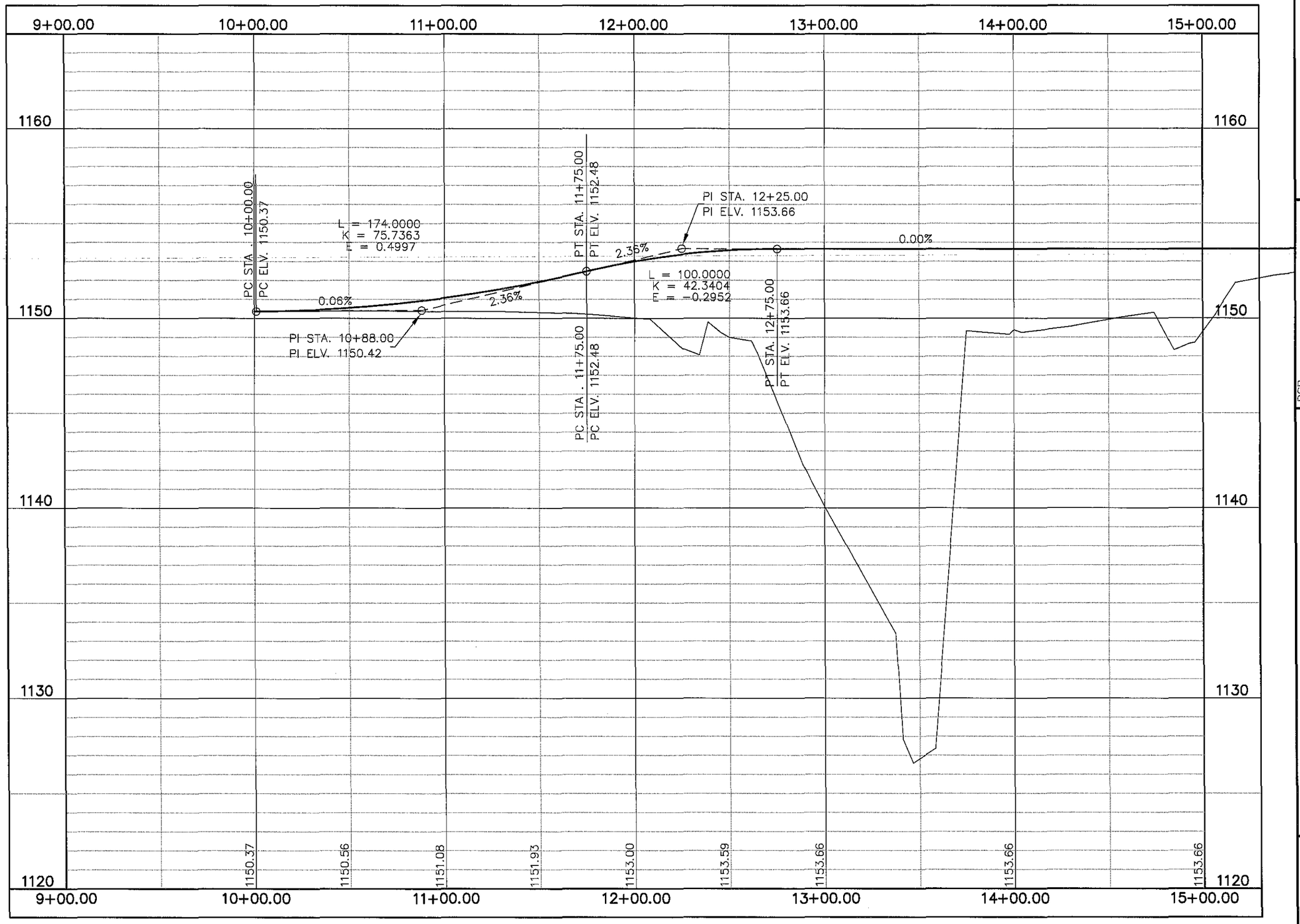

WOODBURY COUNTY
ENGINEERS OFFICE

BSB DRAWN BY:
BK DESIGNED BY:
MJN APPROVED BY:
DATE:
REVISION
DATE:

PROJECT DESCRIPTION: BRIDGE REPLACEMENT WITH GRADING ON 325TH ST. EAST LINE SEC. 29-T86N-R42W

SHEET DESCRIPTION: PROFILE

PROJECT NO.
L-B(X101) --73-97
SHEET
D2

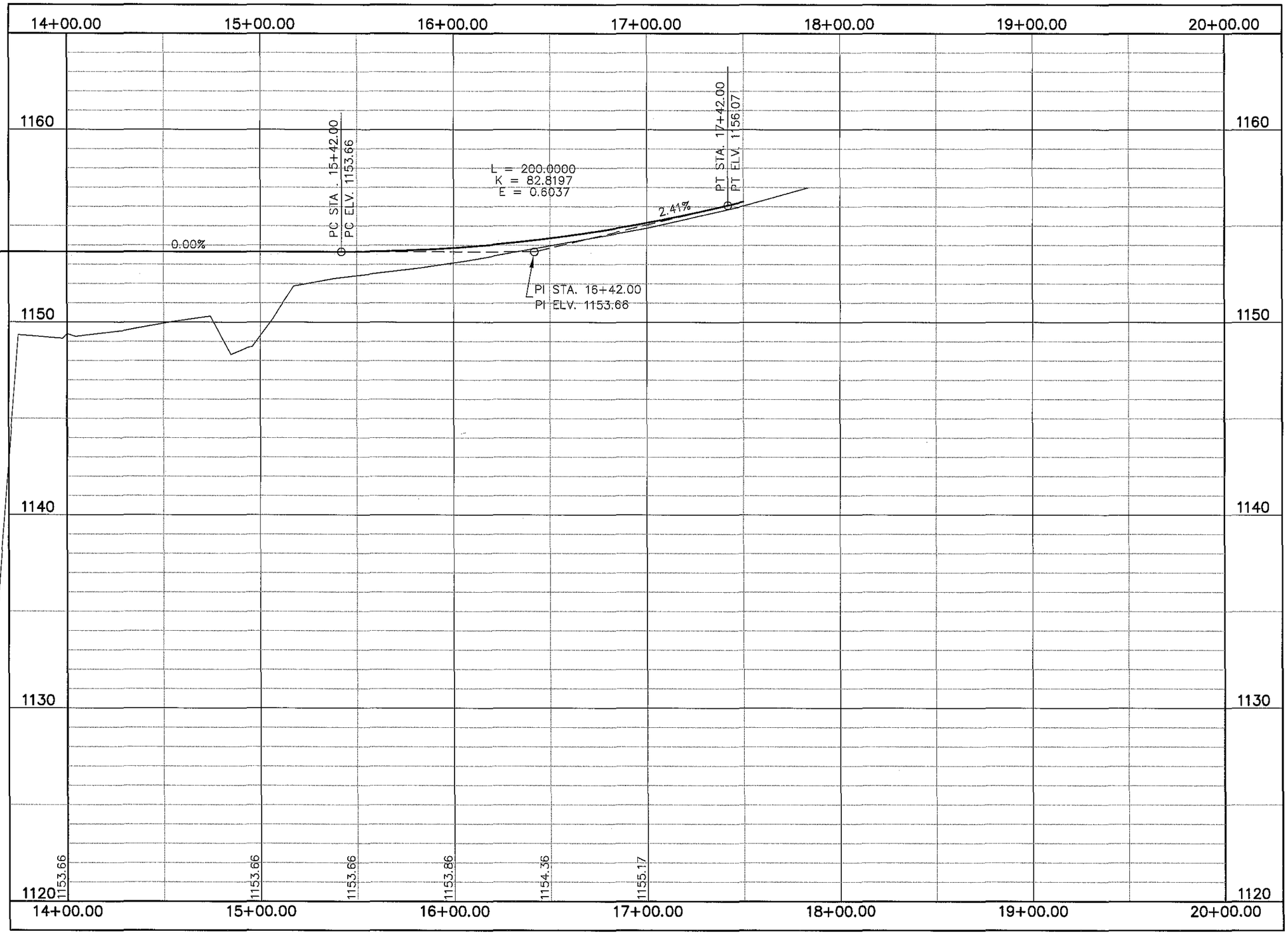

WOODBURY COUNTY
ENGINEERS OFFICE

BSB
DRAWN BY:
BK
DESIGNED BY:
MJN
APPROVED BY:
DATE:
REVISION
DATE:

PROJECT DESCRIPTION: BRIDGE REPLACEMENT WITH GRADING ON 325TH ST. EAST LINE SEC. 29-T86N-R42W

SHEET DESCRIPTION: PROFILE

PROJECT NO.
L-B(X101) --73-97
SHEET
D3

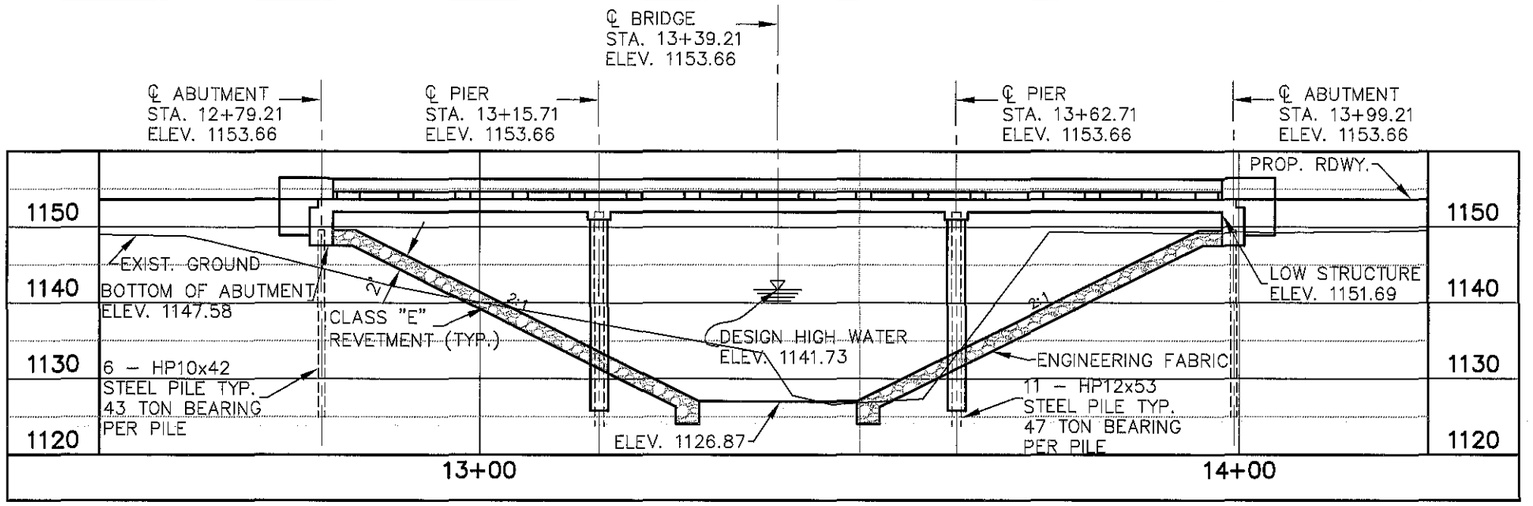

LONGITUDINAL SECTION ALONG CENTERLINE OF BRIDGE

HYDRAULIC DATA

FWHA #350270

Q25	5,110	STAGE ELEV. 1139.54
Q50	6,295	STAGE ELEV. 1140.77
Q100	7,529	STAGE ELEV. 1141.91
Q500	10,770	STAGE ELEV. 1144.50

BRIDGE VELOCITY: 8.20 FT./SEC.
FREEBOARD: 9.96'
DRAINAGE AREA: 23.70 SQUARE MILES

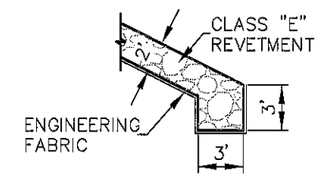

REVETMENT TOE DETAIL

STA. 13+39.21 CONSTRUCT A
120'–0"x30'–6" CONTINUOUS
CONCRETE SLAB BRIDGE

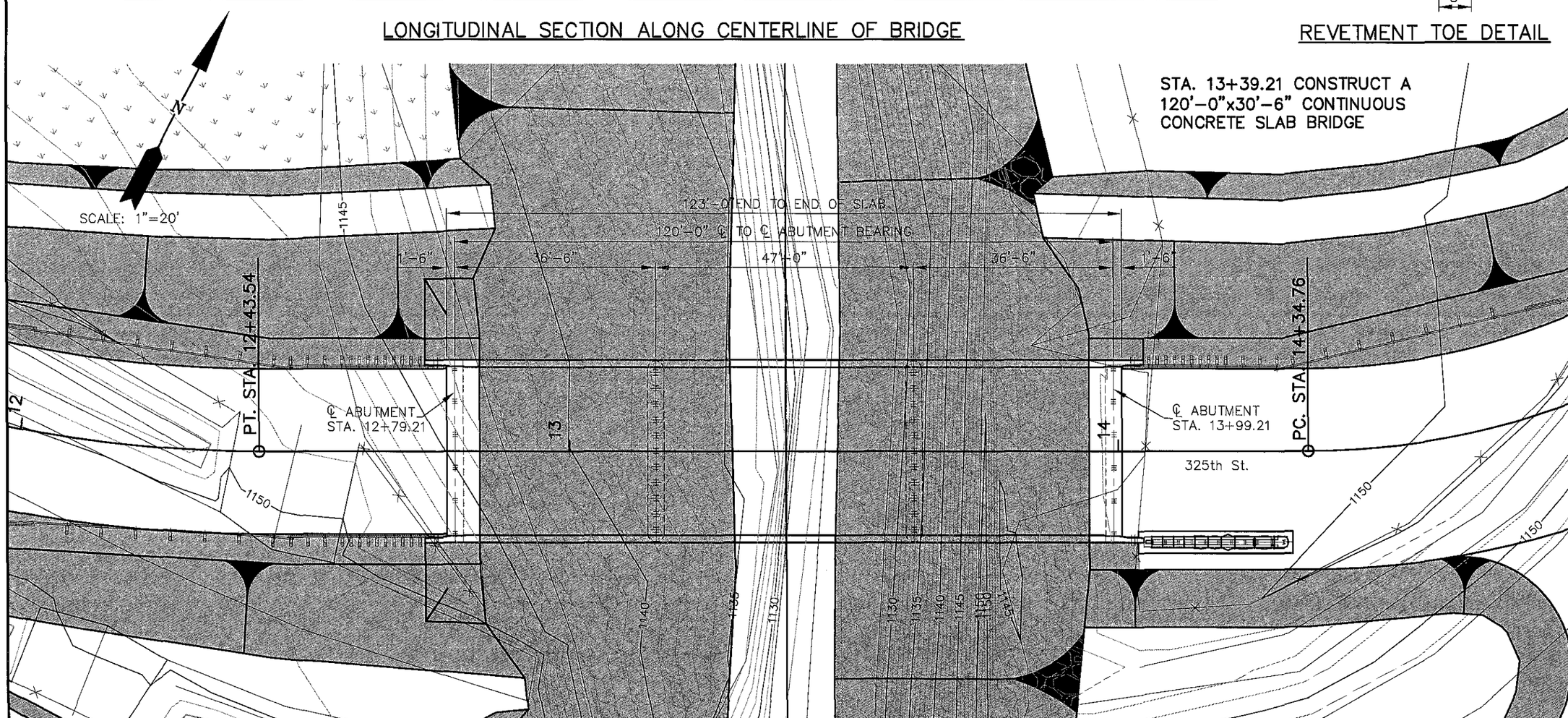

WOODBURY COUNTY
ENGINEERS OFFICE

DRAWN BY:	BSB
DESIGNED BY:	BK
APPROVED BY:	MJN
DATE:	
REVISION	DATE:

PROJECT DESCRIPTION: BRIDGE REPLACEMENT WITH GRADING ON 325TH ST. EAST LINE SEC. 29-T86N-R42W

SHEET DESCRIPTION: PLAN VIEW

PROJECT NO.
L-B(X101) --73-97
SHEET
V1

TOP OF SLAB ELEVATIONS

LOCATION	℄ WEST ABUTMENT BEARING				℄ PIER 1				℄ PIER 2				℄ EAST ABUTMENT BEARING
	LINE 1	LINE 2	LINE 3	LINE 4	LINE 5	LINE 6	LINE 7	LINE 8	LINE 9	LINE 10	LINE 11	LINE 12	LINE 13
ESL (EDGE OF SLAB LEFT)	1153.36	1153.36	1153.36	1153.36	1153.36	1153.36	1153.36	1153.36	1153.36	1153.36	1153.36	1153.36	1153.36
ML (MIDPOINT LEFT)	1153.49	1153.49	1153.49	1153.49	1153.49	1153.49	1153.49	1153.49	1153.49	1153.49	1153.49	1153.49	1153.49
PCL (PARABOLIC CROWN LEFT)	1153.63	1153.63	1153.63	1153.63	1153.63	1153.63	1153.63	1153.63	1153.63	1153.63	1153.63	1153.63	1153.63
℄ (℄ BRIDGE & ROADWAY)	1153.66	1153.66	1153.66	1153.66	1153.66	1153.66	1153.66	1153.66	1153.66	1153.66	1153.66	1153.66	1153.66
PCR (PARABOLIC CROWN RIGHT)	1153.63	1153.63	1153.63	1153.63	1153.63	1153.63	1153.63	1153.63	1153.63	1153.63	1153.63	1153.63	1153.63
MR (MIDPOINT RIGHT)	1153.49	1153.49	1153.49	1153.49	1153.49	1153.49	1153.49	1153.49	1153.49	1153.49	1153.49	1153.49	1153.49
ESR (EDGE OF SLAB RIGHT)	1153.36	1153.36	1153.36	1153.36	1153.36	1153.36	1153.36	1153.36	1153.36	1153.36	1153.36	1153.36	1153.36

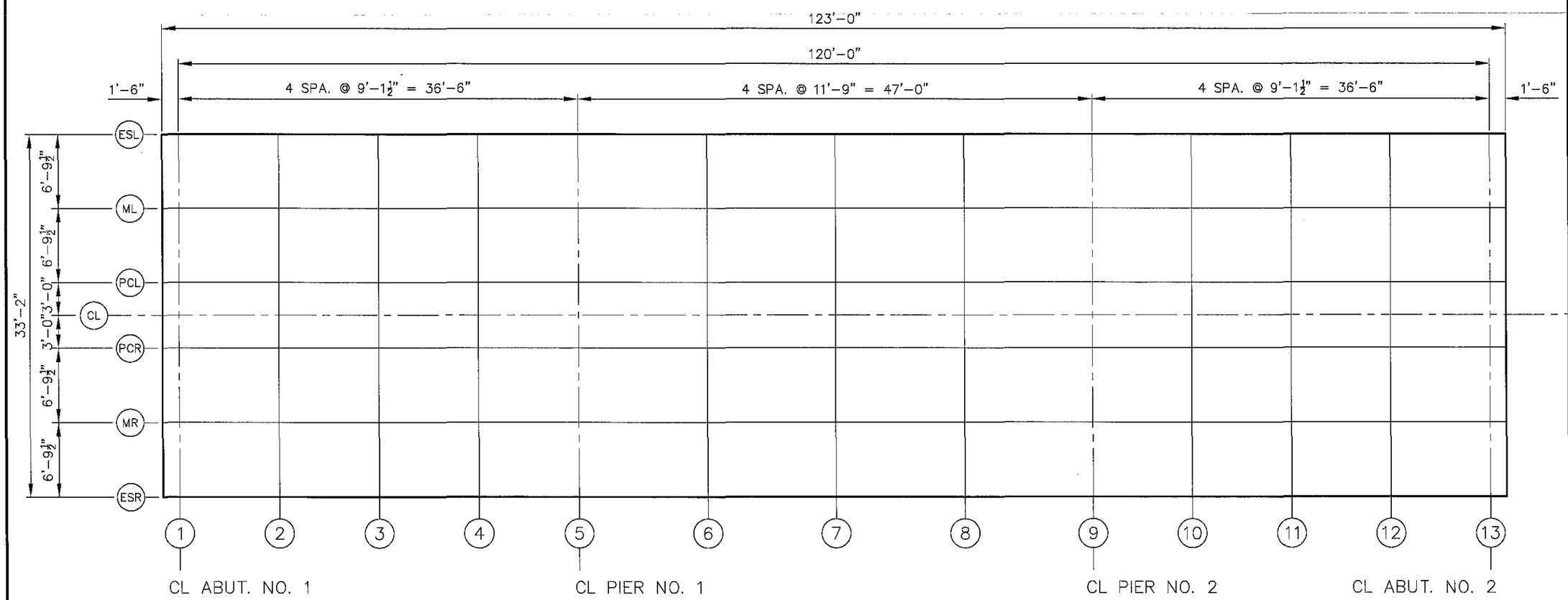

LOCATIONS FOR TOP OF SLAB ELEVATIONS
NO SCALE

NOTE:
Slab elevations do not include form camber required for slab replacement. See IDOT Bridge Standard J30-18E-06 for details

WOODBURY COUNTY
ENGINEERS OFFICE

BSB DRAWN BY:
BK DESIGNED BY:
MJN APPROVED BY:
DATE: REVISION DATE:

PROJECT DESCRIPTION: BRIDGE REPLACEMENT WITH GRADING ON 325TH ST. EAST LINE SEC. 29-T86N-R42W

SHEET DESCRIPTION: TOP OF SLAB ELEVATIONS

PROJECT NO.
L-B(X101)--73-97
SHEET
V2

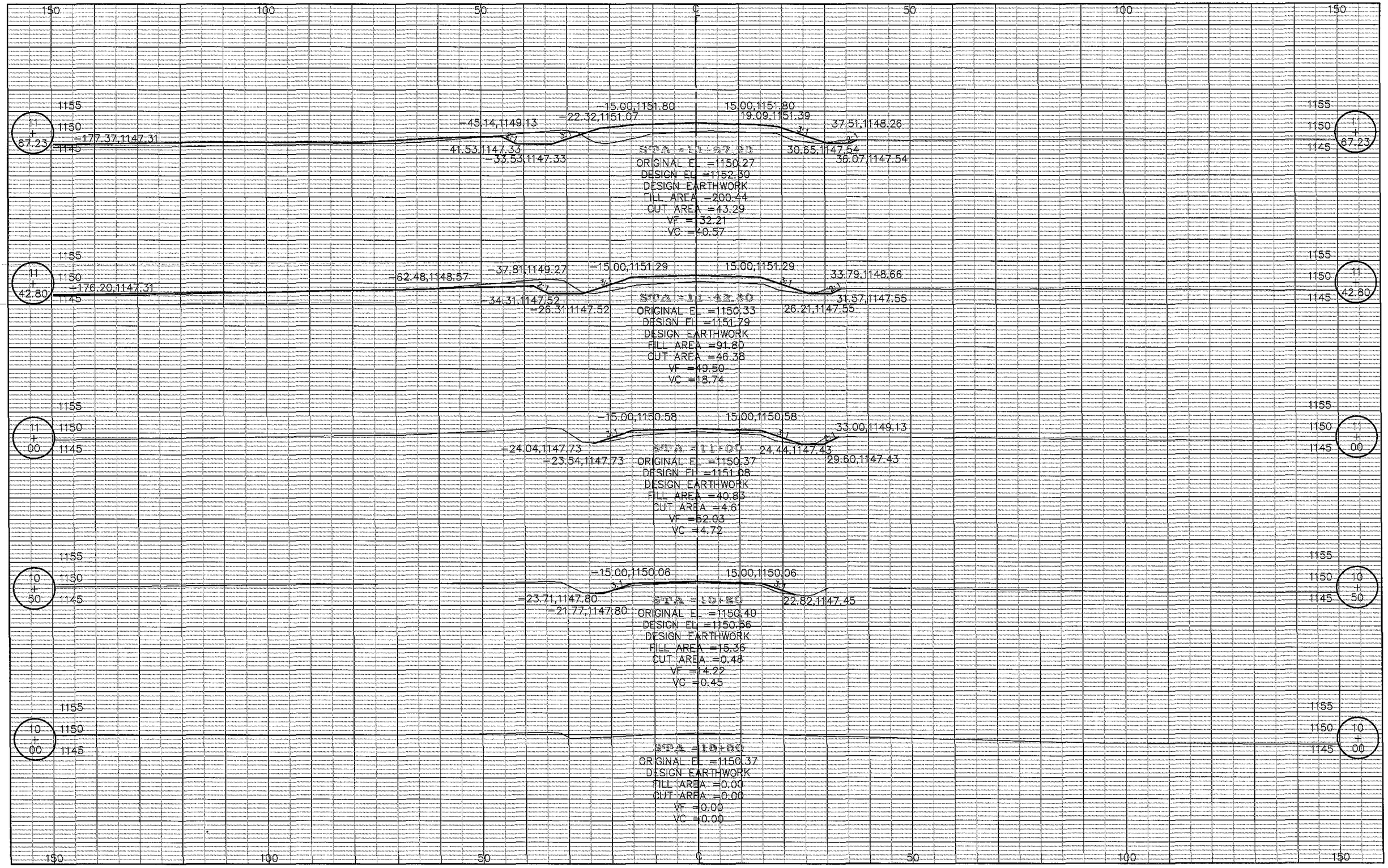

L-B(X101)--73-97 SUBPROJECT #2 X1

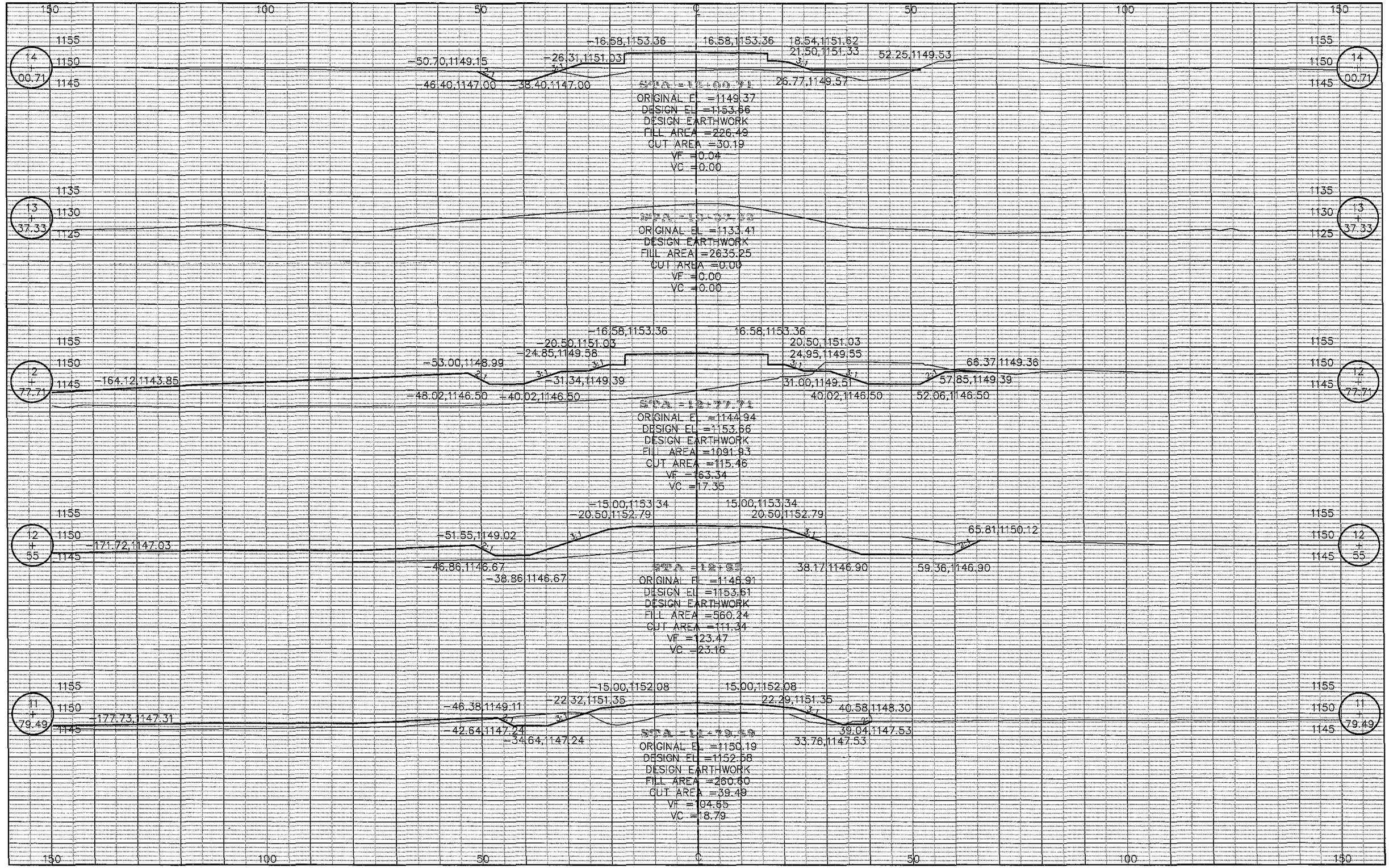

L-B(X101)--73-97 SUBPROJECT #2 X2

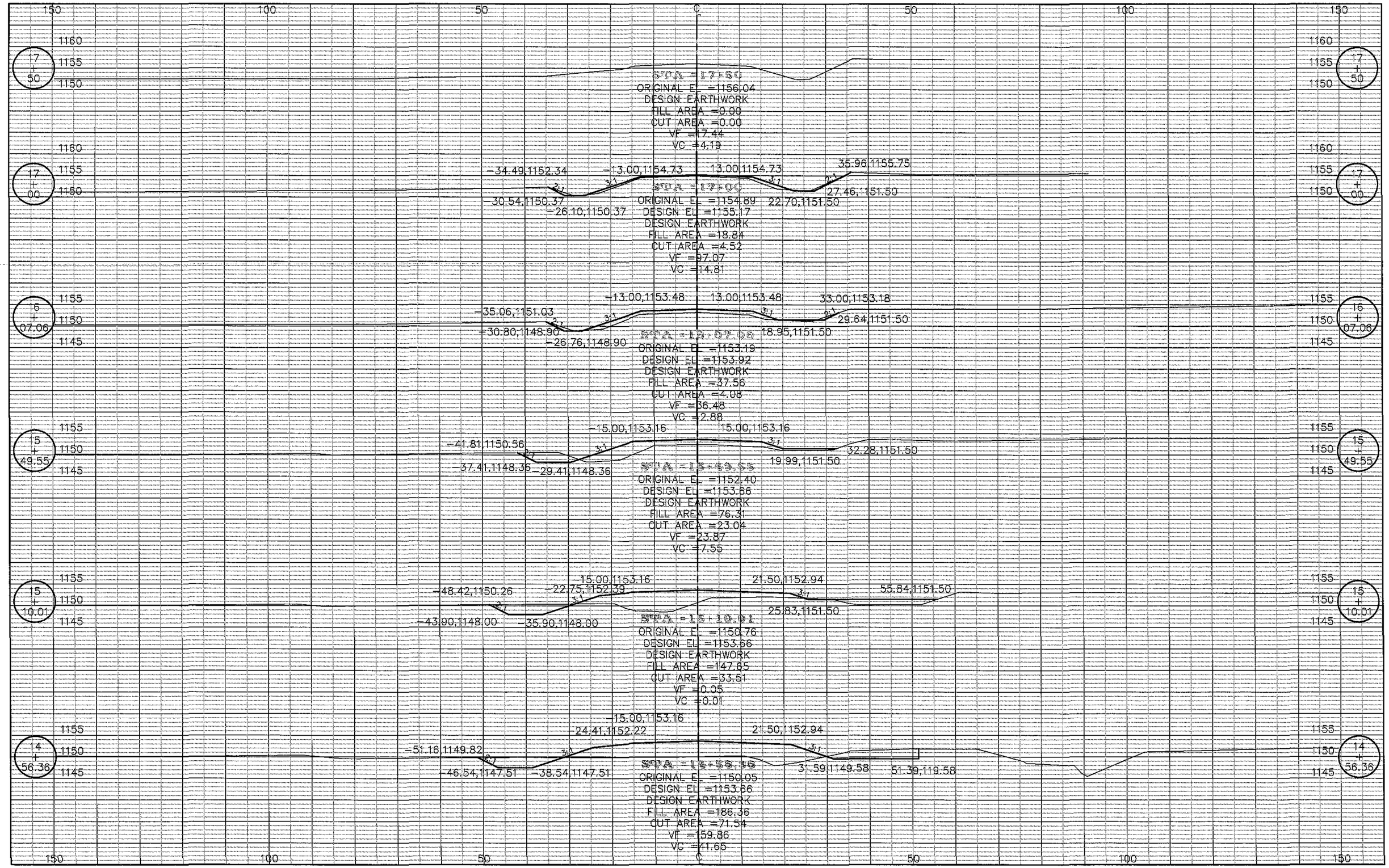

L-B(X101)--73-97 SUBPROJECT #2 X3

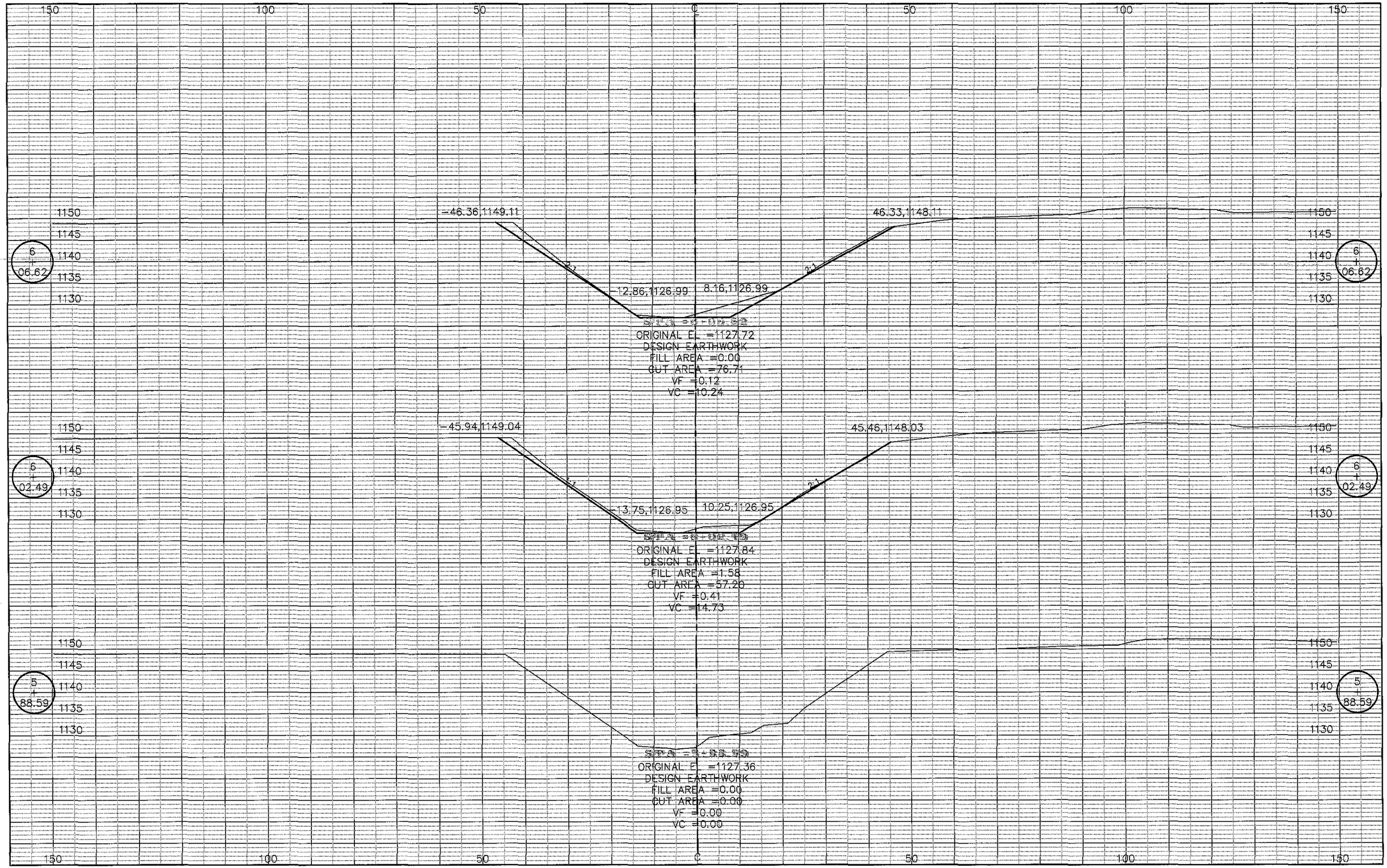

L-B(X101)--73-97 SUBPROJECT #5 CHANNEL SECTIONS X4

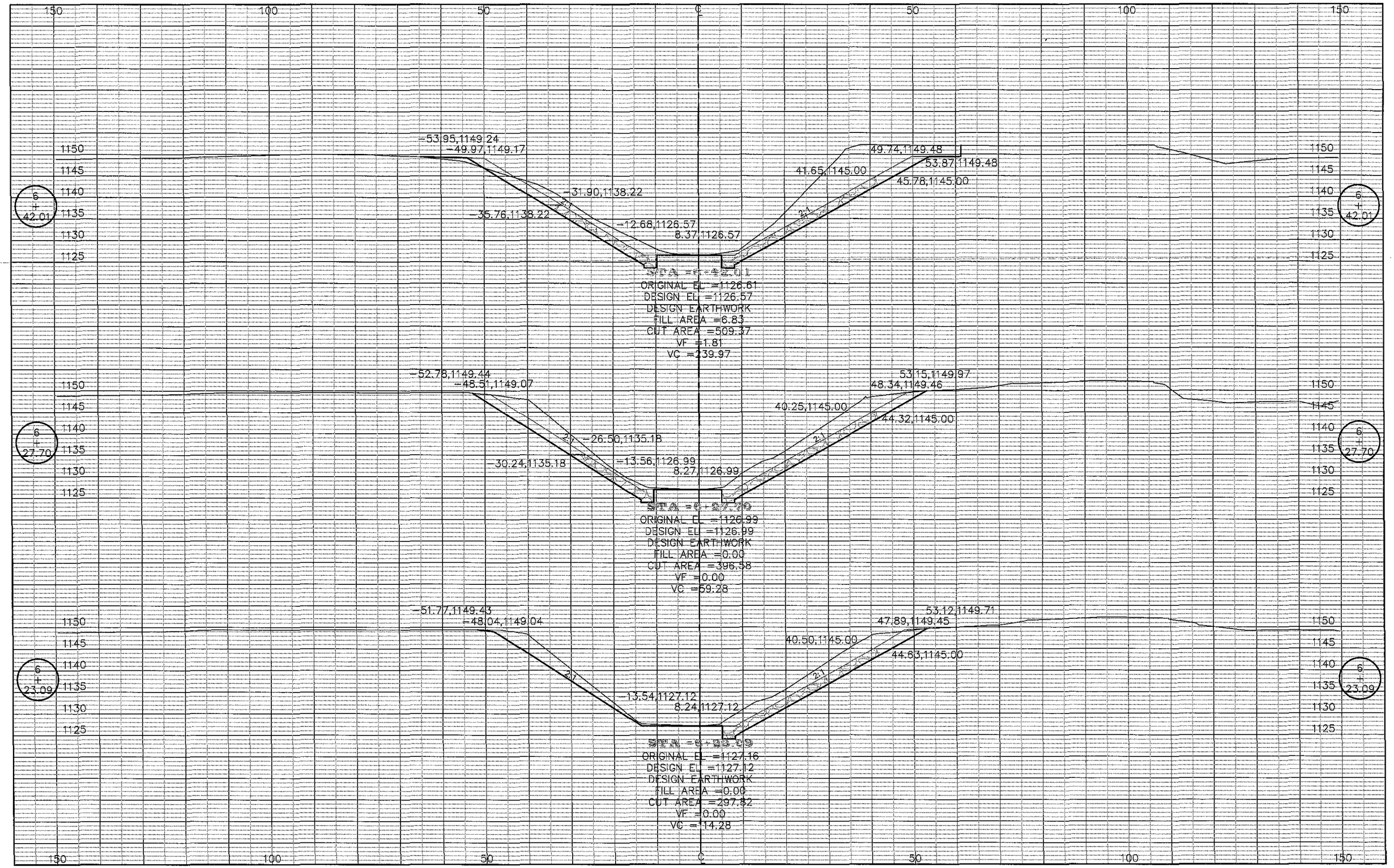

L-B(X101)--73-97 SUBPROJECT #5 CHANNEL SECTIONS X5

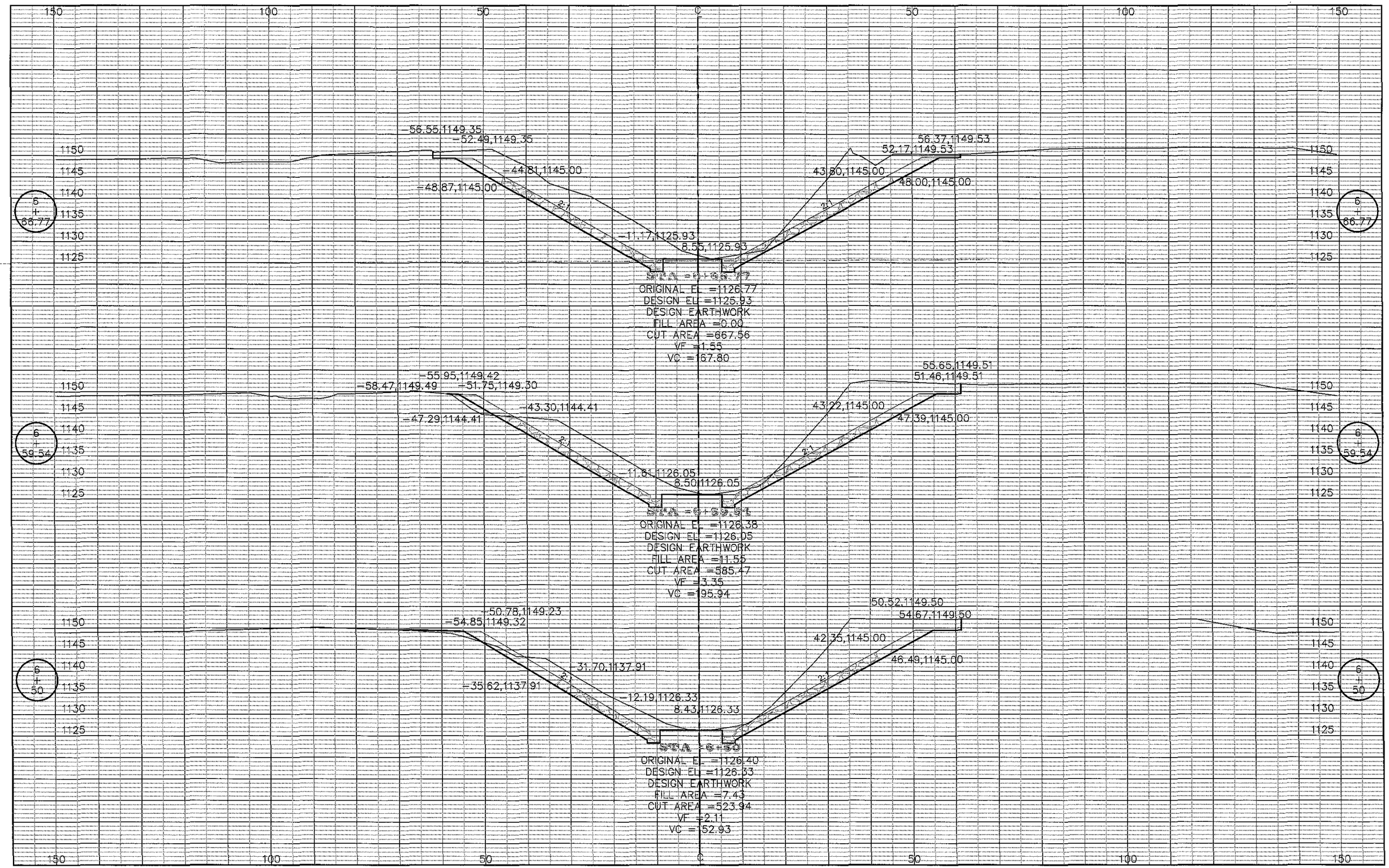

L-B(X101)--73-97 SUBPROJECT #5 CHANNEL SECTIONS X6

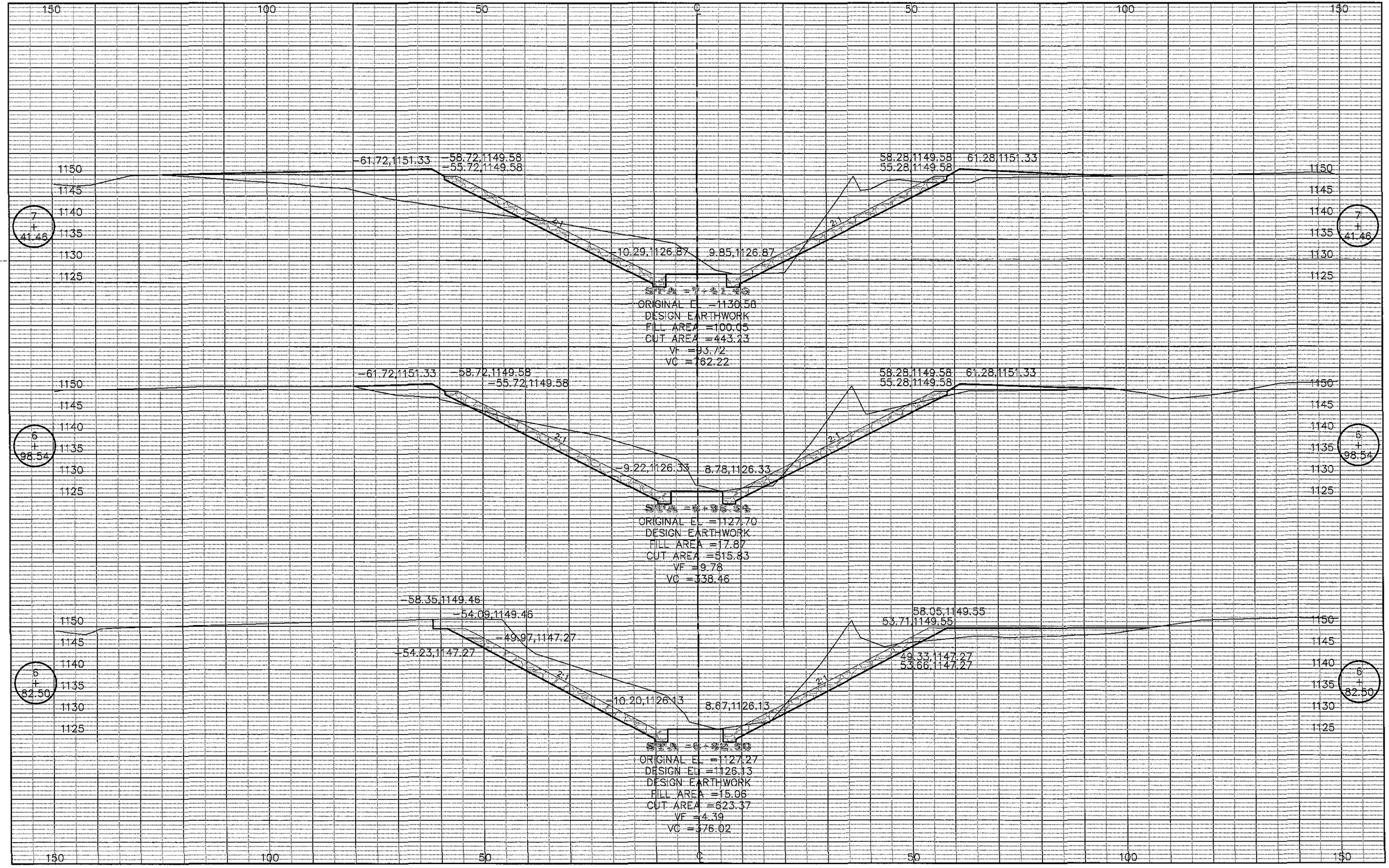

L-B(X101)--73-97 SUBPROJECT #5 CHANNEL SECTIONS X7

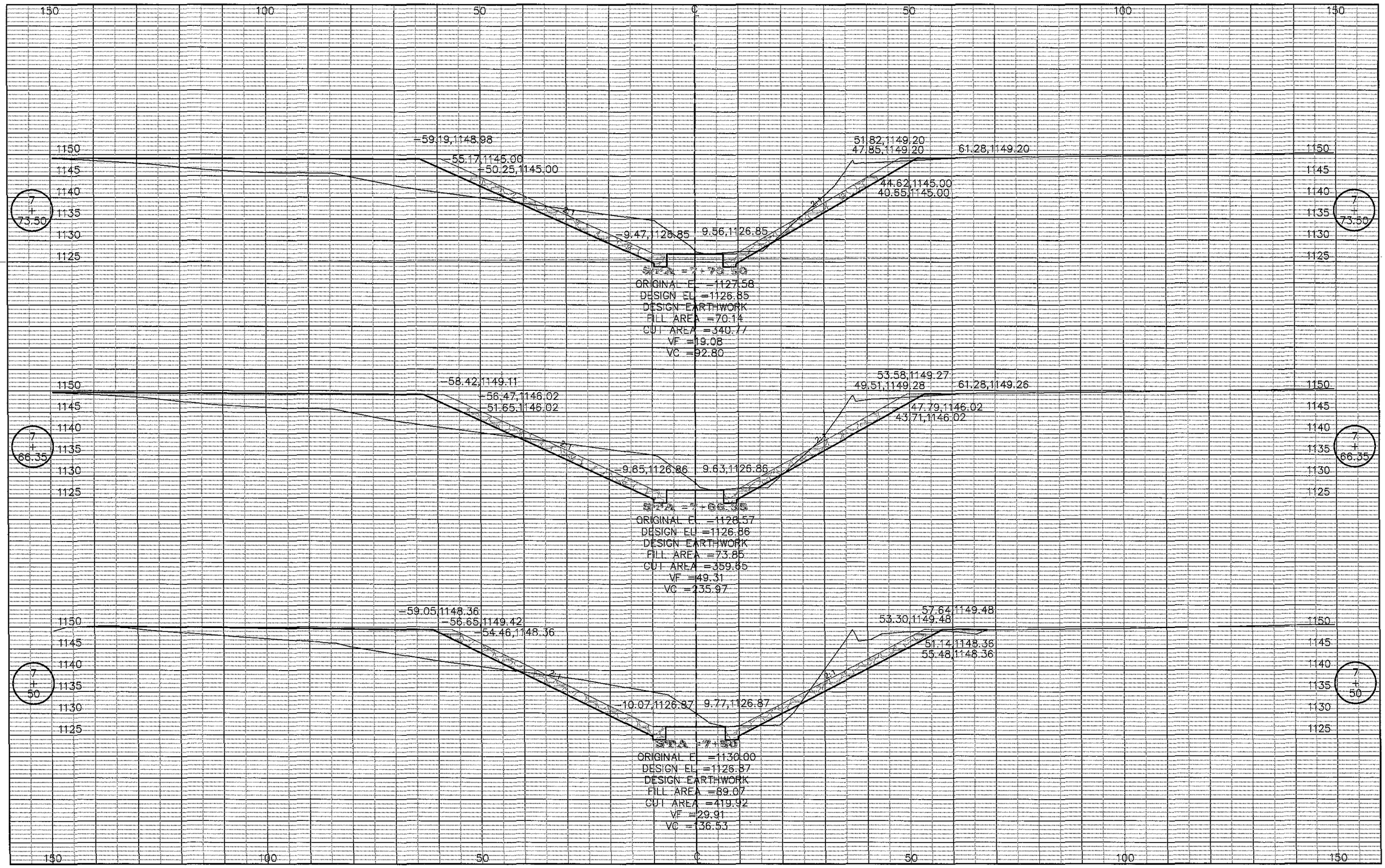

L-B(X101)--73-97 SUBPROJECT #5 CHANNEL SECTIONS X8

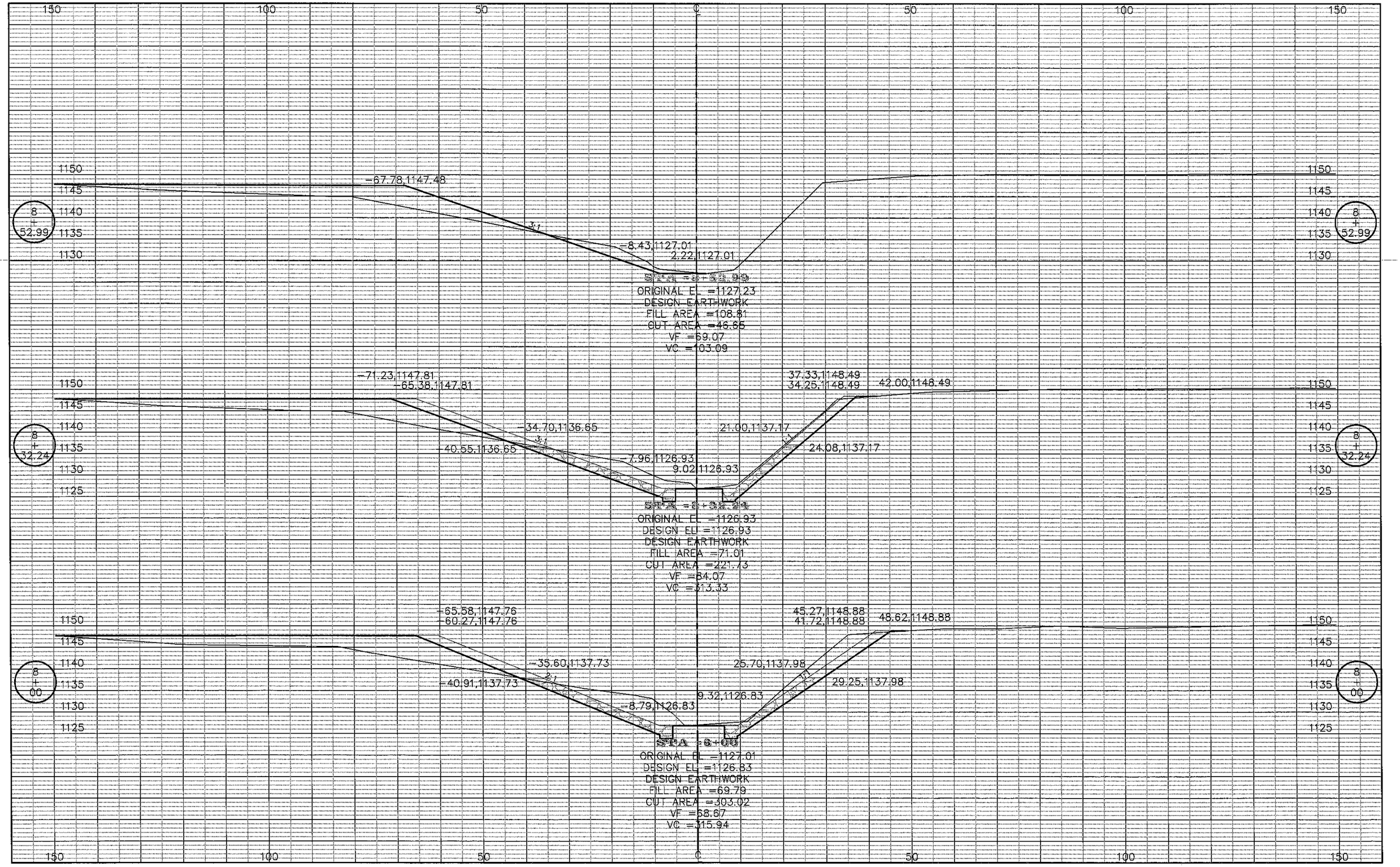

L-B(X101)--73-97 SUBPROJECT #5 CHANNEL SECTIONS X9

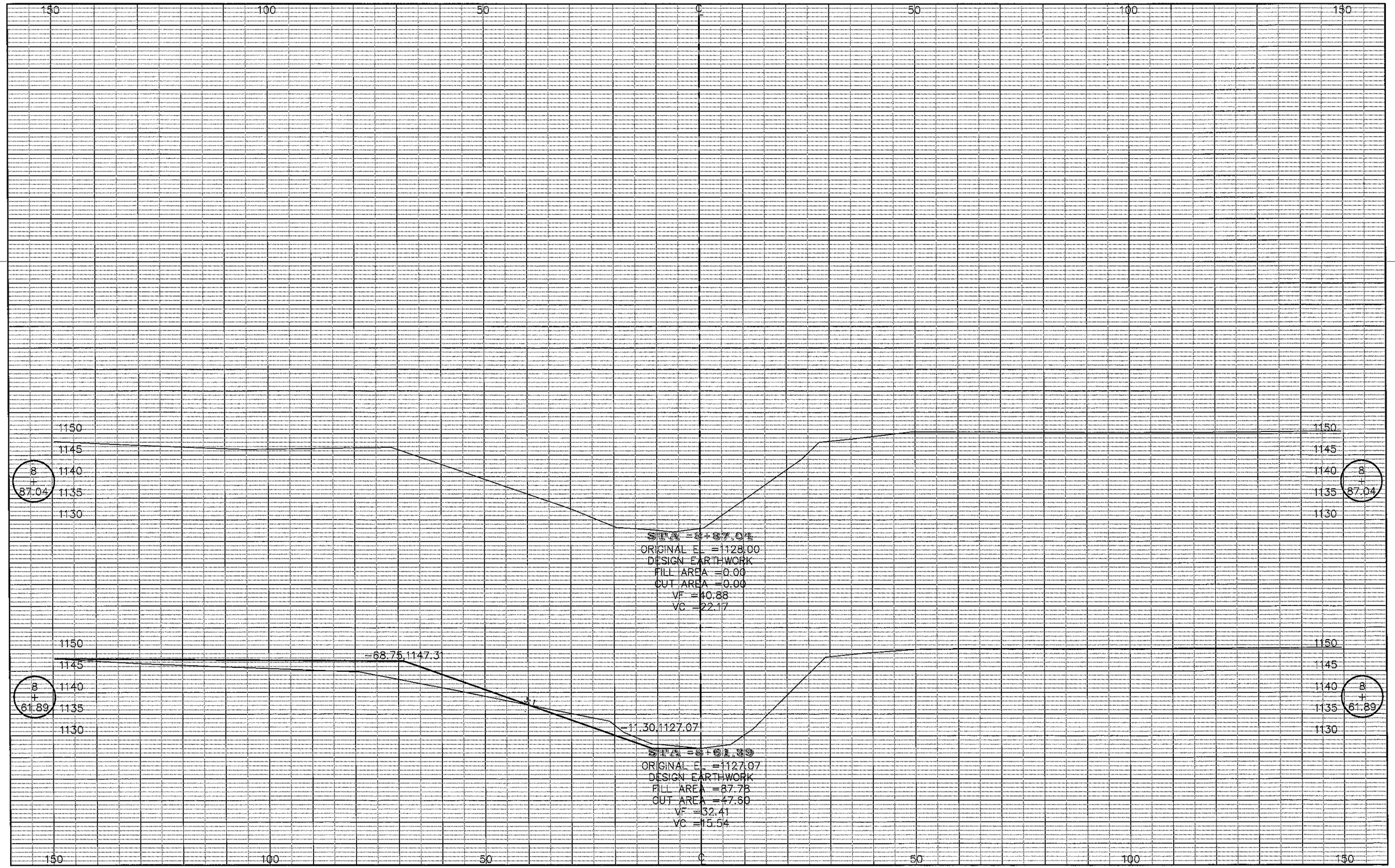

L-B(X101)--73-97 SUBPROJECT #5 CHANNEL SECTIONS X10